SAND78-0413

[redacted]

UNLIMITED RELEASE

Characteristics and Development Report for the MC3160 Inertial Switch

Lewis W. Hake, Jr.

Prepared by Sandia Laboratories [illegible]
[illegible]
[illegible]
Printed October [illegible]

Sandia Laboratories

)Q(7-73)

88p.

Issued by Sandia Laboratories, operated for the United States Department of Energy by Sandia Corporation.

NOTICE

This report was prepared as an account of work sponsored by the United States Government. Neither the United States nor the Department of Energy, nor any of their employees, nor any of their contractors, subcontractors, or their employees, makes any warranty, express or implied, or assumes any legal liability or responsibility for the accuracy, completeness or usefulness of any information, apparatus, product or process disclosed, or represents that its use would not infringe privately owned rights.

SAND78-0413

[redacted]

Printed October 1979

UNLIMITED RELEASE

CHARACTERISTICS AND DEVELOPMENT REPORT FOR THE MC3160 INERTIAL SWITCH

Lewis W. Hake, Jr.
Environmental Sensing Devices Division 2324
Sandia Laboratories
Albuquerque, NM 87185

ABSTRACT

This report concerns the MC3160 Inertial Switch used in the MC3043 Arming, Fuzing, and Firing (AF&F) Assembly of the W78/Mk 12A reentry body (RB). Presented and discussed in this report are the operating principles, design intent, system requirements, component characteristics, development history, and the evaluation test summary.

~~PATENT CAUTION~~

~~This report may contain patentable matter. The contents must not be divulged outside of Sandia Laboratories without the approval of the Invention Reports Division 6011. Approved external recipients must not divulge the information to others.~~

ACKNOWLEDGMENT

The author wishes to acknowledge the significant contribution of L. W. Schulz, Division 2324, in the preparation of this report.

CONTENTS

	Page
1. INTRODUCTION	9
2. DESIGN INTENT	9
2.1 Purpose of the MC3160 Inertial Switch	9
2.2 System Requirements	10
2.2.1 Operate	10
2.2.2 Nonoperate	10
2.2.3 Storage Life	11
2.2.4 Electrical Circuits	11
2.2.4.1 Normally Open	11
2.2.4.2 Normally Closed	11
2.2.5 Handling, Transportation, and Storage	12
2.2.6 Flight Environments	13
2.2.7 Abnormal Environments	13
2.2.7.1 Electrical Isolation	13
2.2.7.2 Mechanical Shock	14
2.2.8 Reliability	15
2.2.8.1 Piston Travel and Latch	15
2.2.8.2 Contact Closure	15
3. COMPONENT CHARACTERISTICS	15
3.1 Description	15
3.2 Component Characteristics and Capabilities	17
3.2.1 Operate	18
3.2.2 Nonoperate Safety Capabilities	27
3.2.2.1 3-g No-Go	27
3.2.2.2 Minimum g-s Operate Capability	28
3.2.2.3 Reset Capability	38
3.2.3 Storage Life	38
3.2.4 Electrical Resistance	40
3.2.5 Contact Chatter	41
3.2.6 Handling, Transportation, Storage, and Flight Environment	43
3.2.6.1 General	43

CONTENTS (cont)

	Page
3.2.6.2 Lot Sample Tests	44
3.2.6.3 Mechanical Shock and Vibration (Component in Reset Condition)	45
3.2.6.4 Mechanical Dynamic Environments (Component in Actuated Condition)	46
3.2.6.5 Reverse Steady-State Acceleration	47
3.2.7 Abnormal Environments	47
3.2.7.1 Electrical Isolation at Room Temperature	47
3.2.7.2 Electrical Isolation in a Fire Environment	48
3.2.7.3 High-Acceleration Mechanical Shock at Room Temperature	50
3.2.7.4 High-Acceleration Mechanical Shock at High Temperature	52
3.2.7.5 Crush	52
3.2.8 Reliability	53
4. DEVELOPMENT HISTORY	53
4.1 Design Initiation	53
4.2 Prototypes	54
4.3 Development Fabrication and Preparation for Production	54
4.4 Pilot Production	55
5. MC2854/MC3160 INERTIAL SWITCH DEVELOPMENT PROGRAM CHRONOLOGY	55
APPENDIX A -- MC3160 Evaluation Test Summary	61
APPENDIX B -- MC2854/MC3160 Orientation Effect Studies	83

ILLUSTRATIONS

Figure		Page
1	MC3160 Electrical Isolation Test Circuit	14
2	Cross-Sectional View of the MC3160 Inertial Switch	16
3	Outline Information for the MC3160	17
4	MC3160 Major Test Axes	17
5	Orientation Test Positions for the MC3160	18
6	MC3160 Curve A Tests	20
7	MC3160 Curve A Times vs Component Orientation	24
8	MC3160 Comparison of Curve A Operate Times	25
9	Effect of Reducing Curve A Acceleration Levels on Curve A Operate Times	26
10	MC3160 Static Acceleration Tests on Pilot Production Lot 1	30
11	MC3160 Curve B, 10-g Test Profile	31
12	MC3160 Pilot Production Lot 1, Curve B, 10-g Times to Closure of NO Electrical Circuit 10-10	32
13	MC3160 Pilot Production Lot 1, Curve B, 10-g Times to Opening of Crowbar Circuit	33
14	Acceleration vs g-s Relationship Between NC Crowbar Circuit 2-3 and NO Electrical Circuit 10-10	34
15	Comparison of Operate Characteristics With Step-Function Input of 10 g to System Requirements	35
16	Comparison of Operate Characteristics With Step-Function Input of 8 g to System Requirements	36
17	Step-Function Characteristics of MC3160 to Crowbar Circuit 2-3 Open	37
A-1	High-Temperature Electrical Insolation Test Circuit	81
B-1	Component Orientations	83
B-2	MC2854/MC3160 Typical Orientation Patterns at Opening of Monitor Circuit	85

TABLES

Table		Page
1	Analysis of Curve A Operate Times	19
2	Analysis of Test Program Effect on Curve A Operate Times	21
3	Analysis of Orientation Effect on Curve A	23
4	Analysis of Component Test Program on PAG for Pilot Production Lot 1	29
5	Analysis of Curve B, 10-g NO Electrical Circuit 10-10 Closure Times for Pilot Production Lot 1	36
6	Input-to-Output Electrical Resistance of the MC3160 Circuits	42
A-1	MC3160 Evaluation Test Summary: In-House Fabrication and Development Phase 3B	62
A-2	MC3160 Evaluation Test Summary: Development Phase 4B and Pilot Production	63
A-3	Phase 2A In-House Fabrication	67
A-4	Phase 3B Development	68
A-5	Phase 4B Development	69
A-6	Pilot Production Lot 1	70

CHARACTERISTICS AND DEVELOPMENT REPORT FOR THE MC3160 INERTIAL SWITCH

1. INTRODUCTION

This report describes the design intent, component characteristics, and development history of the MC3160 Inertial Switch and provides a summary of tests performed to demonstrate its ability to meet weapon system requirements.

2. DESIGN INTENT

2.1 Purpose of the MC3160 Inertial Switch

The MC3160 Inertial Switch is designed to provide accident, handling, and fire safety by maintaining the W78 warhead arming circuits in an open-circuit condition until the component experiences a proper threshold acceleration followed by a sufficient velocity change. Its requirements are summarized in the MC3160 compatibility drawing.[1]

1. "Compatibility, MC3160/MC3043," Sandia Laboratories Document CD316087.

2.2 System Requirements

Detail listings of functional, electrical, and reliability requirements for the MC3160 are given in SB306513,[2] CD315638,[3] and SAND75-0397.[4] The most significant requirements are summarized below.

2.2.1 Operate

The MC3160 must close and latch its normally open (NO) electrical circuits when subjected to any launch acceleration bounded by the minimum/maximum three-stage acceleration-time profiles specified in CD309701.[1]

2.2.2 Nonoperate

The MC3160 must not close its NO electrical circuits when subjected to any of the following conditions:

1. Steady-state acceleration of 3 g or less, regardless of duration.

2. A velocity change of 40 g-s with input accelerations to 4162 g, increasing to 62 g-s between 4162 and 10,000 g (the requirement for the nonoperate velocity change in g-s is 0.62 times the square root of the applied acceleration in g above 4162 g).

3. The nonoperate requirements apply at temperatures to 140°F. At temperatures from 140° to 250°F, the nonoperate g-s requirement is decreased to 30 g-s. At temperatures exceeding 250°F, the nonoperate acceleration and g-s requirements are not applicable since the design of the MC3160 precludes operation.

---

1. "Compatibility, MC3160/MC3043," Sandia Laboratories Document CD316087.
2. "Physical Environments, W78 Components," Sandia Laboratories Document SB306513.
3. "Compatibility, MC3043," Sandia Laboratories Document CD315638.
4. Preliminary Development Report for the W78 Warhead, SAND75-0397 (Albuquerque, NM: Sandia Laboratories, 1975).

The MC3160 shall maintain an electrical short across normally closed (NC) circuit 2-3 at velocity changes to 25 g-s at temperatures to 140°F.

2.2.3 Storage Life

The MC3160 must have a minimum useful shelf life of 20 years.

2.2.4 Electrical Circuits

2.2.4.1 Normally Open

Each NO electrical circuit must have an insulation resistance to all other circuits and to the component case of 15 MΩ minimum with 600 Vdc applied. (See CD316087[1] for functional schematic.) When closed, each NO circuit has an input-to-output resistance of 0.115 Ω maximum. NO circuits 4 and 5 in parallel, when closed, shall be capable of carrying a current of 15 amperes (A) maximum. When subjected to the flight vibration environment defined in the stockpile-to-target sequence (STS),* NO circuits 4, 5, 8, and 9, when closed, are not subject to an accumulative chatter in excess of 2 μs in any 1-ms period. The chatter threshold is 50 Ω.

2.2.4.2 Normally Closed

2.2.4.2.1 Monitor Circuit

The MC3160 provides an NC electrical circuit to monitor the reset position of the inertial piston. Maximum input-to-output resistance of this circuit, when closed, must not exceed 5.0 Ω.

2.2.4.2.2 Crowbar Circuit

The MC3160 provides an NC crowbar circuit to maintain an electrical short across terminals 2-3 on the output end of the component.

---

1. "Compatibility, MC3160/MC3043," Sandia Laboratories Document CD316087.
*At the time of this writing.

When this circuit is closed, its input-to-output resistance, when carrying a current of 0.05 A maximum, must be 10 Ω maximum during normal environments and 100 Ω maximum during abnormal environments. The insulation resistance between this circuit and all other circuits and case ground must be 15 MΩ minimum when measured with 600 Vdc applied. When closed, this circuit must not be subject to momentary opening(s) for accumulated times in excess of 50 μs in any one 1500-μs period. This applies to all handling, transportation, and storage environments. The chatter threshold is 50 Ω.

2.2.5 Handling, Transportation, and Storage

The MC3160 must not operate during exposure to the preflight environments listed in SB306513.[1] However, the MC3160 must be capable of functioning after exposure to the above environments, some of which are summarized as follows:

- Temperature: -35° to 131°F, rate of change not to exceed 38° per min.
- Steady-state acceleration: 2.5 g omnidirectional
- Mechanical shock: 30 g, 50 ms duration; 100 g, 5 ms duration
- Storage life: 20 yr minimum.
- Sine vibration: 0.2-in double amplitude (DA) from 1 g at 10 Hz to 10 g at 31 Hz, 10 g from 31 to 2000 and back to 31 Hz. Sweep rate 1/2 octave per min.

---

1. "Physical Environments, W78 Components," Sandia Laboratories Document SB306513.

2.2.6 Flight Environments

The MC3160 must be capable of meeting all functional requirements during exposure to the powered flight environments associated with launch over the temperature range of 60° to 105°F. After operation and latch, the NO electrical circuits (now closed) must continue to meet the insulation and circuit resistance requirements through the balance of the powered and ballistic flight at temperatures to 134°F. See SB306513[1] for detailed vibration and shock requirements during the powered and ballistic flight.

2.2.7 Abnormal Environments

2.2.7.1 Electrical Isolation

2.2.7.1.1 Ambient Temperature

With the component in the reset condition and up to 2000 Vdc applied between the input terminal of any NO circuit and component case, there will be no electrical breakdown to the component case and no more than 40 V will be developed across the 12-MΩ simulated system load connected between the respective output terminal and case (Figure 1).

2.2.7.1.2 High Temperature

With the component in the reset condition, the MC3160 must provide the same electrical isolation specified at ambient temperature with voltage to 2000 Vdc applied at temperatures to 1000°F (Figure 1). Electrical breakdowns on the component input side to the component case are permissible. The input-to-output resistance of crowbar circuit 2-3 must not exceed 100 Ω at temperatures up to 1000°F.

---

1. "Physical Environments, W78 Components," Sandia Laboratories Document SB306513.

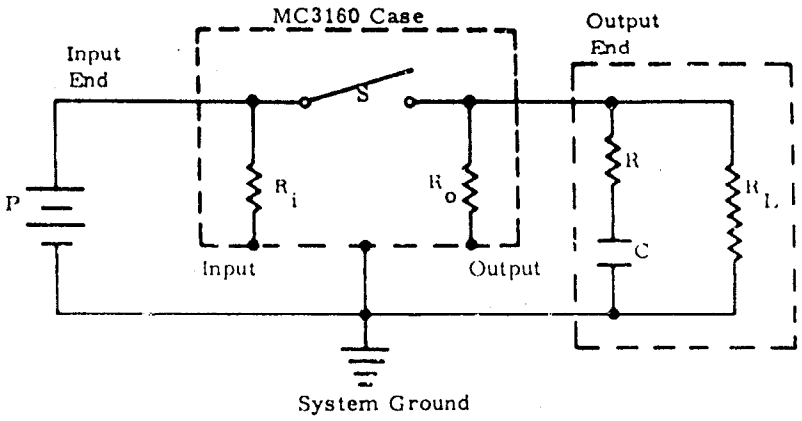

P = power source
L = MC3043 load or equivalent (R_L = 12 MΩ, R = 250 Ω, C = 1 μF)
S = any of the eight NO electrical circuits of the MC3160
R_i = the electrical resistance between any input terminal and the component case
R_o = the electrical resistance between any output terminal and the component case
MC3160 case = the metal housing of the component; common with system ground.

Figure 1. MC3160 Electrical Isolation Test Circuit

2.2.7.2 Mechanical Shock

2.2.7.2.1 Ambient Temperature

With the component in the reset condition, the NO electrical circuits will remain open under any shock input to 10,000 g having a duration of 0.5 ms applied along any axis. Following the shock application, the crowbar circuit must maintain an electrical short with input-to-output resistance of 100 Ω maximum.

2.2.7.2.2 600°F

With the component in the reset condition, the NO electrical circuits will remain open under any shock input to 5000 g having a duration of 1.0 ms or less applied along any axis. The crowbar circuit must maintain the electrical short across terminals of circuit 2-3 and its input-to-output resistance must not exceed 100 Ω.

2.2.8 Reliability

The reliability allocation for the MC3160 in its service environment is shown in the following two paragraphs.

2.2.8.1 Piston Travel and Latch

Given the required acceleration and velocity change, the probability that the MC3160 piston will operate and be latched in the actuated position is 0.995.

2.2.8.2 Contact Closure

Given an actuated and latched piston, the probability that any NO circuit will be closed is 0.9994.

3. COMPONENT CHARACTERISTICS

3.1 Description

The MC3160 is a spring-mass, fluid-metering inertial switch that provides multiple electrical switch closures after experiencing a proper acceleration-time environment. It contains eight NO and two NC electrical circuits. One NC circuit provides a means of electrically monitoring the reset or safe position of the inertial piston, while the other maintains an electrical short across a critical output circuit until the proper acceleration-time environment is experienced. The device contains a decoupling mechanism which disconnects the bias spring from the inertial piston just prior to closure of all NO circuits. This feature permits more of the missile launch acceleration to be available to overcome the friction loads associated with closing eight NO circuits and latching the piston in its actuated position. Silicone fluid is metered through a sharp-edged orifice until piston travel is sufficient to close the NO circuits and enable a ball latch mechanism to function and lock the piston in its actuated position. For test purposes, the switch can be manually reset. Changes in fluid volume as a result of temperature changes are compensated for by the accumulator bellows.

In a fire environment, a thermal detent (operate temperature is 250°F) operates and locks the piston in the reset or safe position. The detent mechanism and accumulator bellows assembly is also designed to provide a fail-safe capability in the event the metering fluid is lost. A cutaway view of an MC3160 Inertial Switch is shown in Figure 2. The external envelope dimensions are provided by Figure 3. An electrical schematic and detailed component dimensions are given in SB314401.[1] The MC3160 has a displacement volume of approximately 3.84 in.^{3} and weighs about 0.91 lb.

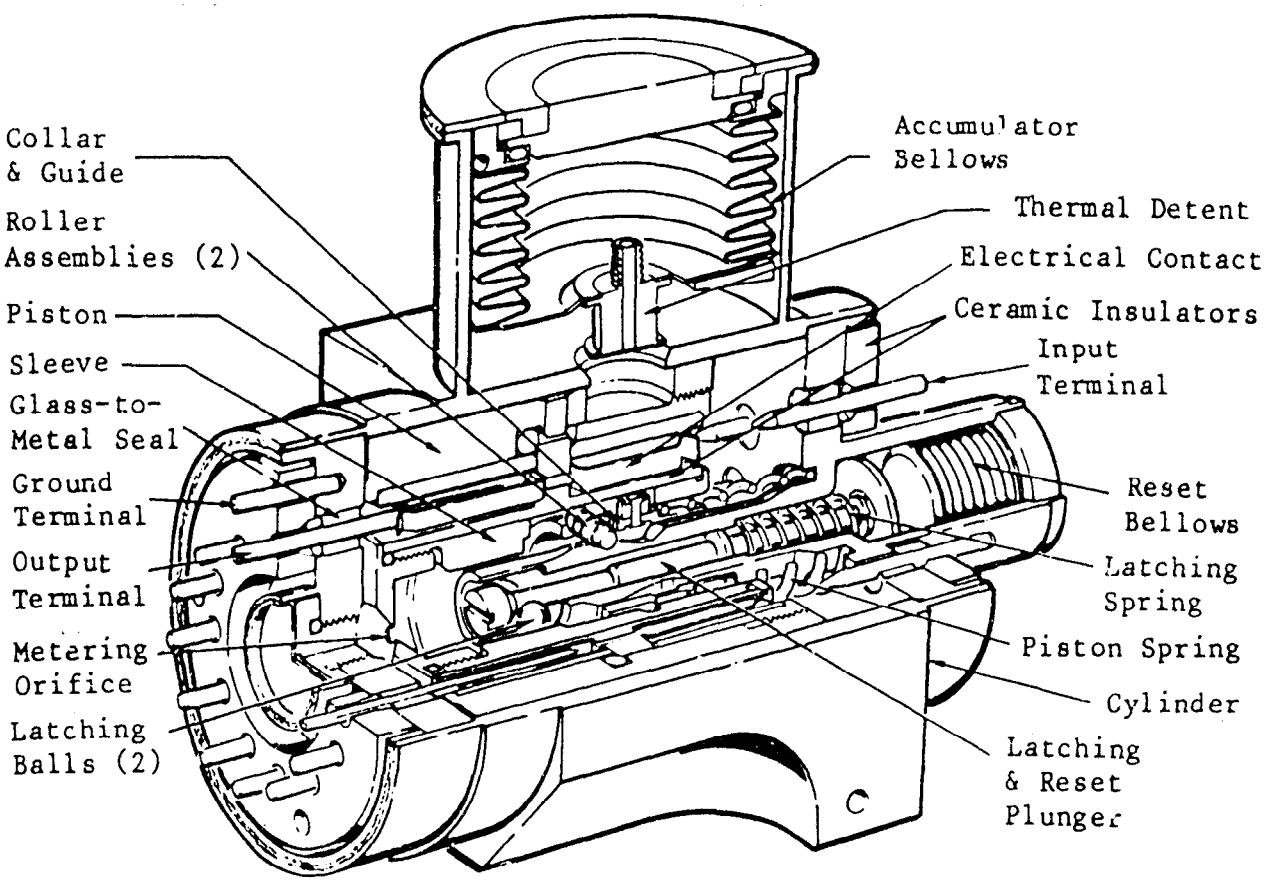

Figure 2. Cross-Sectional View of the MC3160 Inertial Switch

1. "Mechanical Compatibility, MC3160," Sandia Laboratories Document, SB316087.

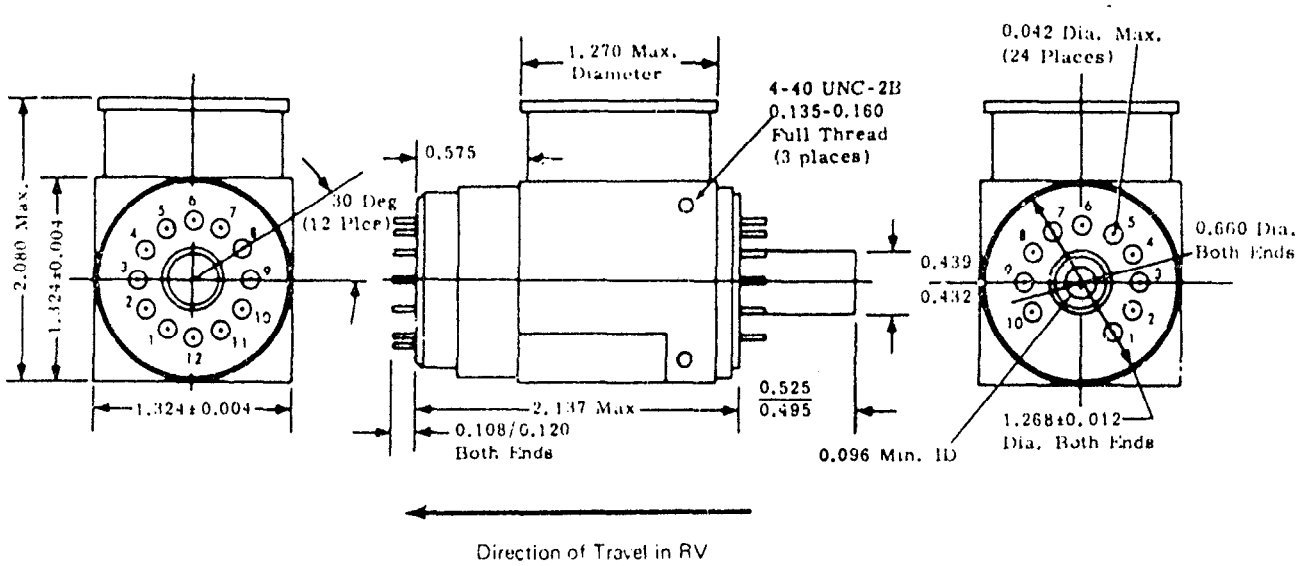

Figure 3. Outline Information for the MC3160

3.2 Component Characteristics and Capabilities

Appendix A contains a comprehensive summary of tests conducted on the MC3160 Inertial Switch. The component axes definition used in testing is shown in Figure 4. Appendix B discusses variations in component operate characteristics with component orientation. The component test orientations used in the ensuing discussions are shown in Figure 5.

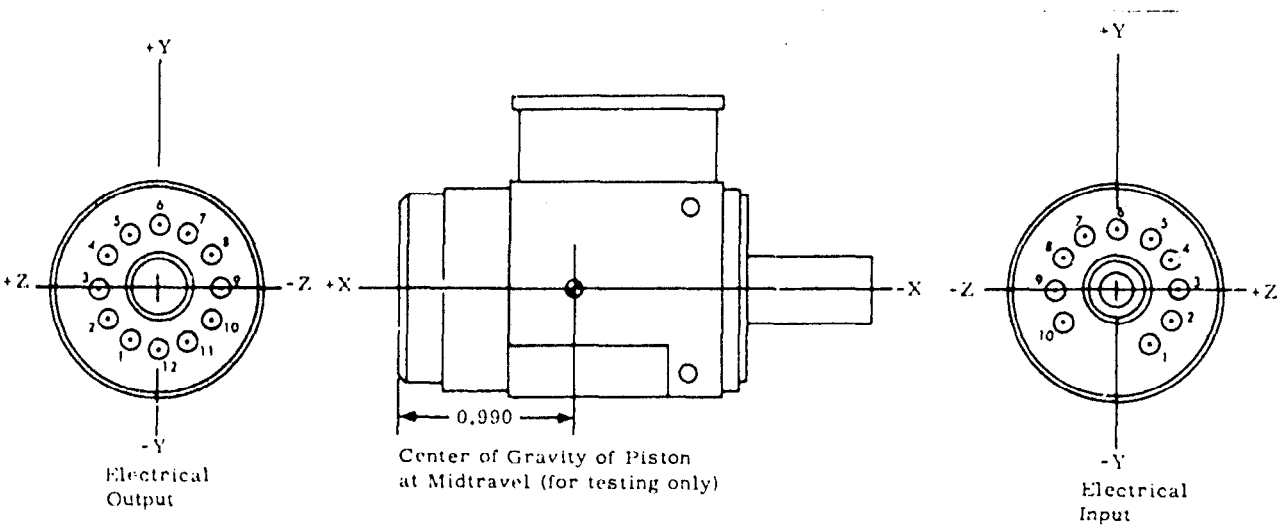

Figure 4. MC3160 Major Test Axes

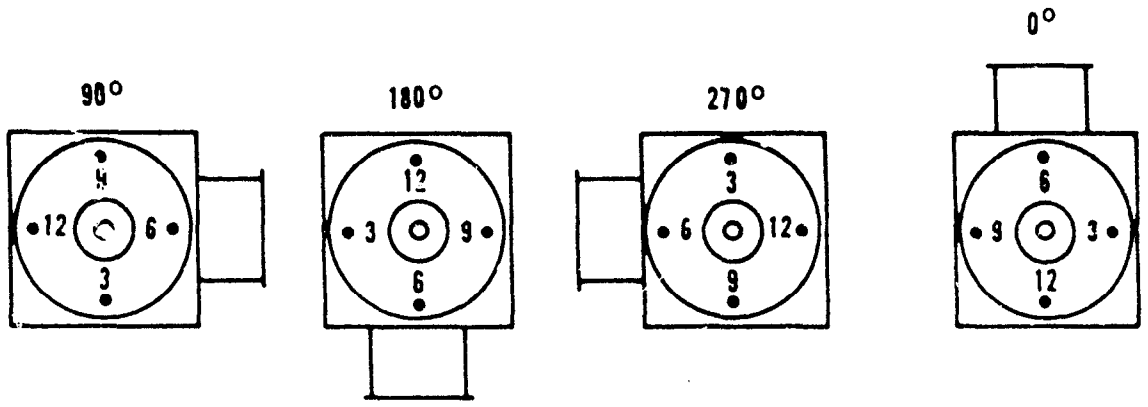

NOTE: Position of component is shown when facing the reset bellows end

Figure 5. Orientation Test Positions for the MC3160

The MC3160 is a modification of the MC2854 Inertial Switch, with the only differences being: (1) a NC crowbar circuit has been added to the MC3160; (2) the MC2854 has 10 NO electrical circuits while the MC3160 has 8; (3) to reduce header cost, the terminal pins of the MC3160 reset header are not shaped as was done on the MC2854 to reduce friction drag; and (4) the MC3160 uses a stronger bias spring. Much of the test data, analyses, and established capabilities were compiled in testing the MC2854 and are applicable to the MC3160.

Results of tests and analyses conducted to date indicate that the MC3160 meets all functional, electrical, and safety requirements (including safety capabilities under abnormal environments) with adequate margin. A discussion of MC3160 capabilities vs requirements, including summaries of pertinent test data and analyses, is presented in this section.

3.2.1 Operate

The product specification's[1] operational acceptance limits were established to assure that an MC3160, initially accepted under these

1. "Product Acceptance Specification, MC3160," Sandia Document PS316087.

limits, will, under any combination of use conditions, have a high probability of closing its NO electrical circuits and latching in the actuated condition when it is subjected to the minimum third-stage acceleration-time profile of the use application. Test results and analyses indicate that the MC3160 will meet the application operate requirements with a substantial margin.

The minimum third-stage launch profile was chosen for production acceptance testing instead of the combined three stages allowed in the use requirements. Use of this single stage allows better measurement of component operate variability and significantly reduces test time.

Curve A (of the product specification) represents the minimum third-stage use profile and the operate times obtained are to closure of the last NO circuit. A modification to the acceleration-time characteristics of the third stage for some flights occurred between development phase 4B and pilot production lot 1 (TMS* lot). The original modification and acceptance test profiles are shown in Figure 6. The 100% Curve A test results from development phases 3B, 4B, and pilot production lot 1 are summarized in Table 1 and plotted on the time base in Figure 6. Table 2 summarizes the results of the lot sample tests and overtests.

TABLE 1

Analysis of Curve A Operate Times

Lot No.	No. of Units	No. Data Points	Operate Times on Profiles of Figure 6 (s) $\bar{X}$	σ	$\bar{X}+3\sigma$	Range	Test Profile
3B	16	48	32.86	1.08	36.10	30.9-36.1	Original
4B	19	57	30.70	1.24	34.42	28.3-34.8	Original
PP1†	33	99	29.24	1.20	32.85	26.5-32.8	Final

†To recover some of the margin lost in the reduction of the minimum acceleration-time characteristics of the new test profile, the bias spring forces were reduced for pilot production lot 1.

*Tool-made sample

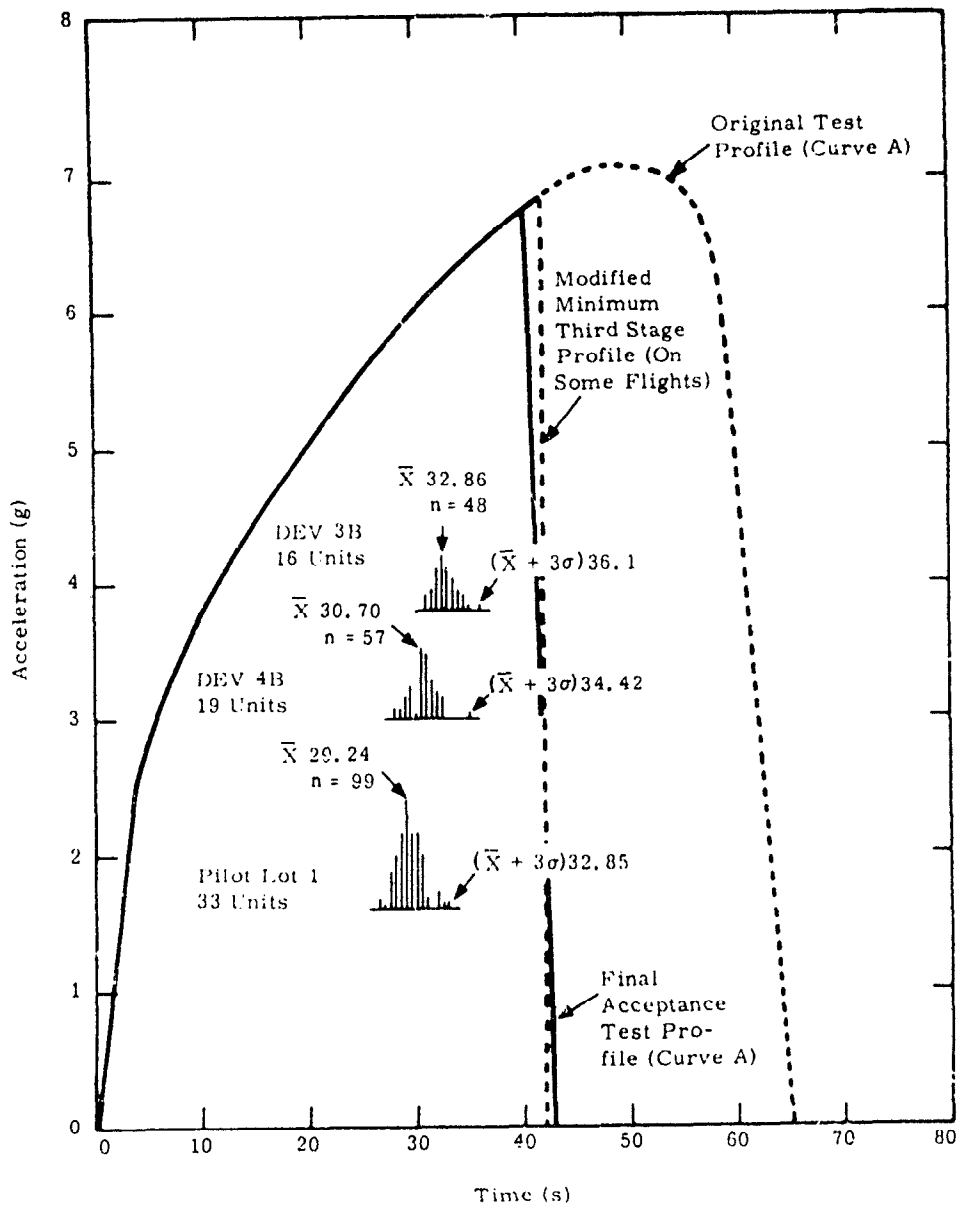

Figure 6. MC3160 Curve A Tests

TABLE 2

Analysis of Test Program Effect on Curve A Operate Times

Fabrication Group	Test	No. of Units Tested	No. of Data Points	Operate Times on Profiles of Figure 6 (s) $\bar{X}$	σ	Range
3B	100% Tests on Lot Sample Units[1]	4	12	32.93	0.51	32.2-34.0
	Lot Sample Tests					
	Post temperature	4	8	32.81	0.69	31.9-34.1
	Life (50 operational cycles)	2	10	33.62	0.75	32.6-34.7
	Postsine vibration reset (3 hours at 10 g)	2	4	32.12	0.62	31.2-32.6
	Postmechanical shock reset (18 shocks at 300g)	2	4	33.81	0.40	33.4-34.4
	Overtests					
	Life (150 operation cycles)	2	30	33.76	1.14	32.2-35.5
	Postsine vibration reset (3 hours at 20 g)	2	4	32.23	0.37	31.9-32.7
	Postshock reset (3 shocks at 2500 g)	2	4	34.13	0.25	33.8-34.3
4B	100% Tests on Lot Sample Units[1]	4	12	30.37	1.17	28.3-31.9
	Lot Sample Tests					
	Posttemperature	4	8	30.57	1.08	28.8-32.0
	Life	2	12	29.77	1.43	28.5-33.0
	Postsine vibration reset (3 hours at 10 g)	2	4	31.21	0.63	30.6-31.8
	Postmechanical shock reset (18 shocks at 300 g)	2	4	29.91	1.16	28.5-31.2
	Overtests					
	Life (150 operation cycles)	2	34	30.42	1.17	28.5-33.0
	Postsine vibration reset (3 hours at 20 g)	2	4	31.32	0.72	30.6-32.3
	Postmechanical shock reset (3 shocks at 2500 g)	2	4	30.23	1.45	28.8-32.2
Pilot Lot 1	100% Tests on Lot Sample Units[1]	8	24	29.19	0.88	27.6-31.0
	Lot Sample Tests					
	Posttemperature	8	16	29.59	1.20	27.8-32.4
	Life (50 operational cycles)	4	24	29.43	1.22	27.8-31.3
	Postsine vibration reset (3 hours at 10 g)	4	8	28.80	0.82	27.9-30.4
	Postmechanical shock reset (18 shocks at 300 g)	4	8	29.94	1.02	29.1-32.2

[1]Curve A tests performed on these units during the original 100% Acceptance Testing.

Table 3 shows the Curve A test results on pilot production lot 1 units for different component orientations. The table summarizes the in-process test results in the 180° and 0° orientations and the 100% test results in the 90° orientation. Also shown is the population consisting of units in their fastest orientation which more closely depicts expected performance in actual flight with reduced side load. The composite of results in all three orientations and the population of the fastest orientation are plotted in Figure 7 along with the 100% test population. Table 3 also summarizes the results of special tests conducted on 18 of the units in 4 orientations, with both a 1-g side load applied and with a 0-g side load. The composite population in four orientations with a 1-g side load and a 0-g side load are plotted in Figure 8. The results indicate that the component orientation effect is relatively small when testing is done with a 1-g side load, and is essentially nonexistent in a flight environment with a reduced, sustained side load. The results also indicate that production acceptance test data (with a 1-g side load) are conservative and provide some margin with respect to expected performance in flight. To evaluate the operate margin of the MC3160, 10 pilot lot 1 units were subjected to a series of special tests. The units were tested (with a 1-g side load) on the minimum third-stage profile and on a series of other test profiles with reduced applied accelerations. The results which are shown in Figure 9 indicate that substantial margin exists with respect to the specified minimum third-stage profile. More margin exists under flight conditions with reduced, sustained side loads than is indicated in Figure 9.

Eight pilot lot 1 units were tested on the minimum first-stage profile with 0-g side loads. Each unit operated and latched in the actuated condition; however, very little margin existed. The average contact closure for this group occurred at 54.34 s into the first-stage profile. These results indicate that many MC3160s will operate on the minimum first-stage flight profile. All of the above tests were performed at room temperature. Ten pilot lot 1 units were tested on Curve A over the launch temperature range. Results indicate the MC3160 will operate about 1.5 s faster at 105°F and about 0.5 s slower at 60°F than it would at room temperature.

TABLE 3

Analysis of Orientation Effect on Curve A

Test	Applied Side Load (g)	Component Orientation (°)	No. of Units	No. Data Points	Functional Operate Time on Curve A (s) $\bar{X}$	σ	$\bar{X}+3\sigma$	Range
In-process	1	180	33	66	29.42	1.19	32.99	27.2 -32.93
In-process	1	0	33	66	29.14	1.06	33.32	26.76-32.45
100%	1	90	33	99	29.26	1.21	32.89	26.55-32.82
In-process	1	All 3	33	231	29.28	1.18	32.82	26.55-32.93
Plus 100%		Orientations						
100% Plus	1	Minimum of the 3	33[1]	77	28.67	0.86	31.24	26.55-30.72
In-process		Orientations						
Special	1	90	18[2]	54	29.25	1.29	33.11	26.7 -32.44
Special	1	180	18	54	29.29	1.20	32.90	26.92-31.38
Special	1	270	18	54	28.64	0.77	30.94	27.18-30.46
Special	1	0	18	54	28.83	1.18	32.37	26.98-32.54
	1	All orientations	18	162	29.01	1.14	32.43	26.70-32.54
Special	0	90	18[3]	36	27.75	0.65	29.69	26.38-29.42
Special	0	180	18[3]	36	27.85	0.67	29.85	26.25-28.99
Special	0	270	18[3]	36	27.85	0.61	29.67	26.27-28.90
Special	0	0	18[3]	36	27.82	0.59	29.58	26.25-28.88
	0	All orientations	18[3]	144	27.82	0.60	29.61	26.25-27.42

NOTES: 1. The population that consists of the fastest operate time in any orientation more nearly represents the expected performance under flight conditions.
2. This group included eight lot sample units
3. Special orientation test performed at Sandia.

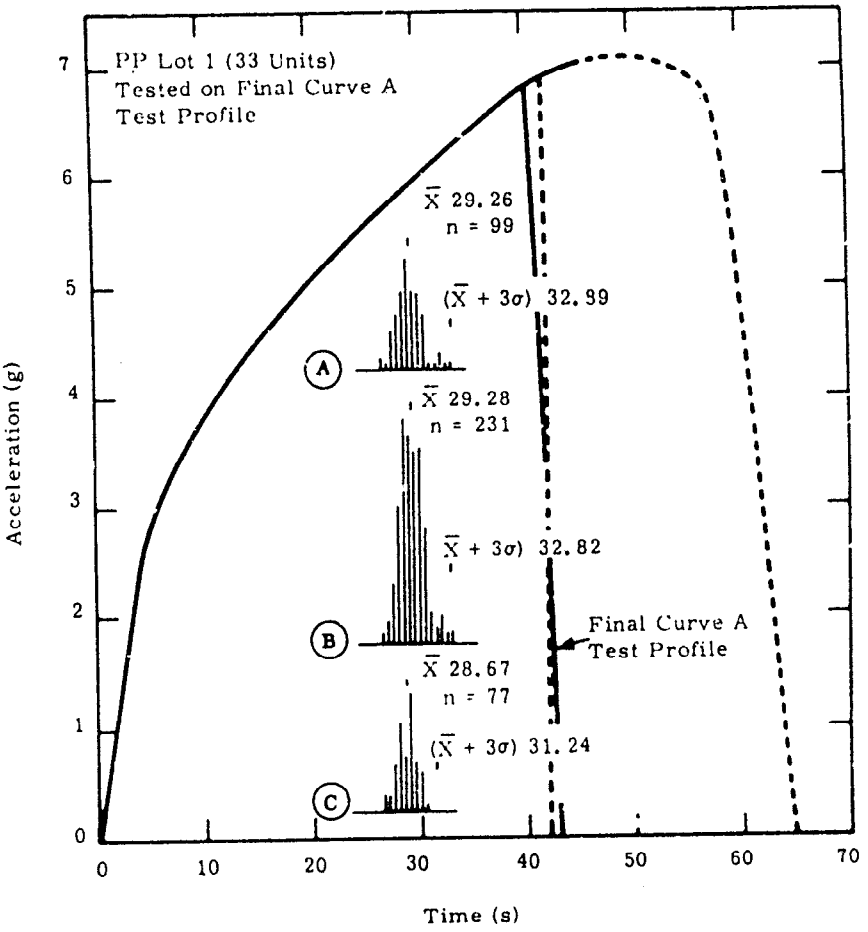

NOTES:

1. Population (A) from pilot production lot 1 Curve A 100% acceptance in 90° orientation.
2. Population (B) from pilot production lot 1 Curve A 100% tests in 90° orientation, in-process tests in 180° orientation, and in-process tests in 0° orientation.
3. Population (C) represents the fastest Curve A operate time in any of the above tests orientations.

Figure 7. MC3160 Curve A Times vs Component Orientation

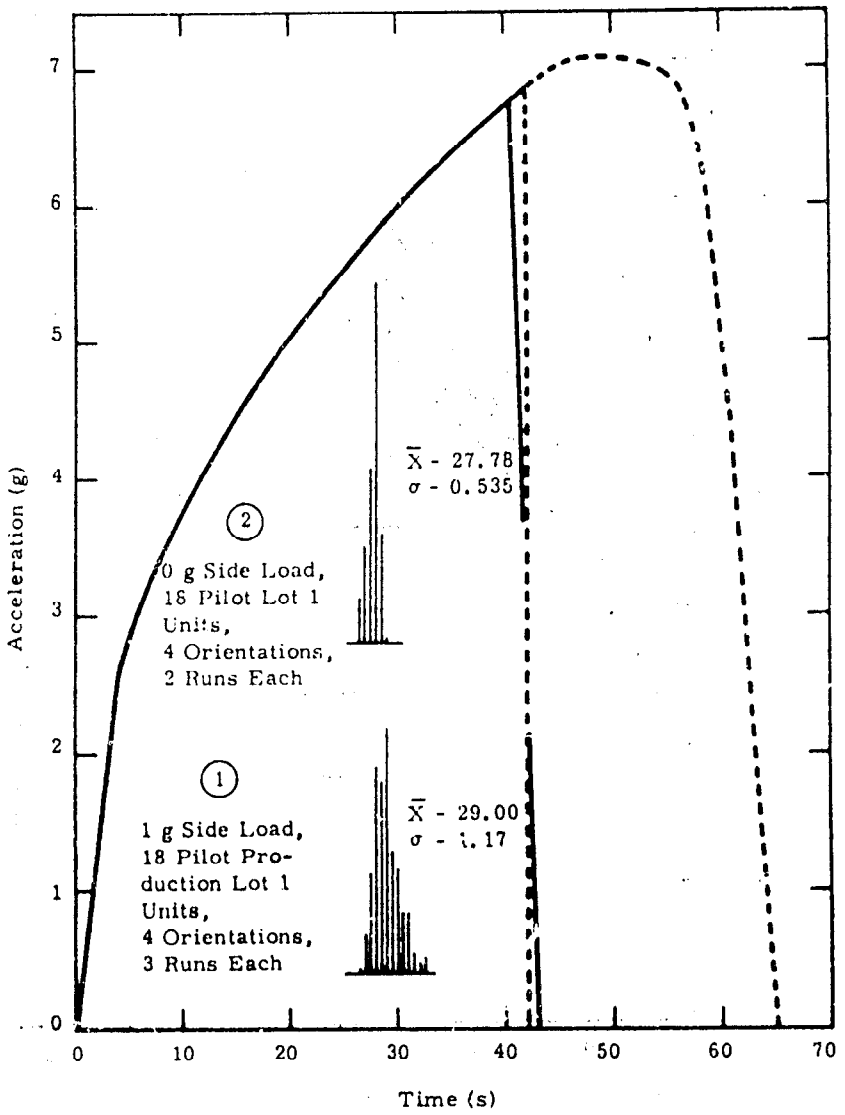

Figure 8. MC3160 Comparison of Curve A Operate Times

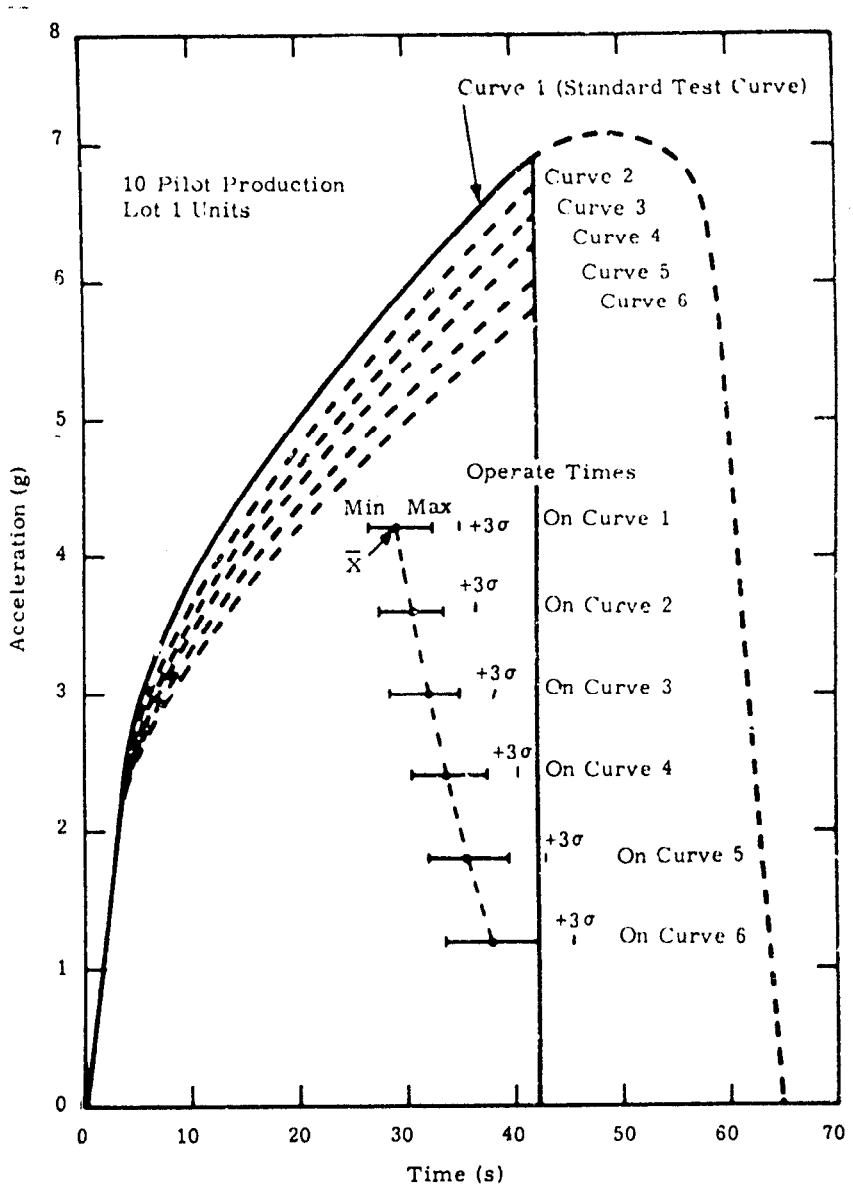

Figure 9. Effect of Reducing Curve A Acceleration Levels on Curve A Operate Times

3.2.2 Nonoperate Safety Capabilities

The MC3160 contains a decoupling mechanism which disconnects the bias spring from the inertial piston just prior to closure of all NO electrical circuits. This feature makes available more of the missile launch acceleration to overcome the friction loads associated with closing eight NO circuits and latching the piston in its actuated position.

One of the NO electrical terminals on the actuate end of the component (circuit 10-10) is longer than those of the other seven NO circuits so that closure of this circuit occurs before decoupling of the spring. Closure of this circuit is used in all testing of nonoperate safety characteristics.

3.2.2.1 3-g No-Go

The 3-g No-Go capability is assured by the bias spring design. The minimum spring force requires about 3.46-g applied acceleration to actuate the MC3160 for nominal component dimensions and with no frictional forces. In addition, in-process Instron tests are made on each unit with the unit in the vertical position (i.e., no gravitational applied side load). The minimum allowed force to actuate the unit on the Instron is equivalent to about 3.42-g applied acceleration.

For acceptance testing on the centrifuge, the component is subjected to steady-state accelerations greater than 3 g with acceptance based on the NC monitor circuit remaining closed. These steady-state accelerations are: 3.2 g for in-process Instron tests with the component in the 180° and 0° orientation positions, 3.3 g for the 100% tests with the component in the 90° orientation position, and 3.1 g for lot sample tests in the 90° orientation position. Also, the input acceleration level required to open the NC monitor circuit (referred to as pullaway g or PAG) is measured during in-process, 100%, and lot sample tests by subjecting

the component to a slowly rising acceleration ramp (rate not to exceed 0.01 g per second). Use of the monitor circuit open acceleration level in acceptance tests is conservative in that an additional nominal force equivalent to about 0.34 g is required to compress the bias spring the additional amount for actuation. Since the No-Go capability is controlled by the spring specification and Instron tests, the primary utility of the centrifuge test is to insure that a gross change (such as a broken spring) has not occurred and to collect data.

Test data and analyses of the MC2854 show that it has substantial margin in relation to the 3-g No-Go requirement. The MC3160 has even more margin because of its stronger spring.

Results of MC3160 pilot lot 1 production acceptance PAG tests are summarized in Table 4. Figure 10 depicts populations of the minimum acceleration levels obtained when various groups of MC3160s are tested in different orientations at both Honeywell and Sandia. Tests at Sandia were performed to determine static acceleration levels required to open the monitor circuit and to close NO circuit 10-10 in each of four orientations, with 1-g applied side load and with 0-g side load.

3.2.2.2 Minimum g-s Operate Capability

Test Curve B (10 g) (Figure 11) is used in production acceptance testing to control the minimum 40 g-s characteristic. Tests and analyses were performed to establish correlation between the operate times on this curve and the equivalent g-s product with 8-g and 10-g step-function inputs. Specification requirements and Curve B test acceptance limits were established to assure that an MC3160 that meets acceptance specifications has a high probability of meeting the minimum g-s requirements under any combination of use conditions. Each unit is subjected to the 10-g Curve B profile during in-process tests (180° and 0° orientations) and the 100% acceptance tests (90° orientation) at ambient

temperature. In addition, all lot sample units are tested at 145°F. Each unit accepted is also tested at 5 g and 20 g to provide a continuing monitor of the normalcy of the g-s characteristic curve.

TABLE 4

Analysis of Component Test Program on PAG for Pilot Production Lot 1*

Test	Component Orientation (°)	No. Units	No. Data Points	PAG to Monitor Open (s)			
				$\bar{X}$	σ	Minimum	$\bar{X}-3\sigma$
In-process	180	33	33	3.77	0.15	3.56	3.32
In-process	0	33	33	3.74	0.11	3.57	3.41
100%	90	33	66	3.75	0.10	3.58	3.46
All Lot Sample	90	8	28	3.77	0.11	3.63	3.45

*Lot sample data includes all tests at room temperature and 145°F.

Since the MC3160's stronger spring (and greater friction) is the only design difference between it and the MC2854 affecting the minimum g-s product to NO switch closure, the minimum g-s product for the MC3160 is greater (approximately 3 g-s) than that for the MC2854 (the minimum requirements are the same). Therefore, tests and analyses performed on the MC2854 are conservatively applicable to the MC3160.[1] Tests and analyses conducted on both components demonstrate that the MC3160 capability meets the use requirements.

1. Due to the commonality of most of the piece parts with the MC2854 inertial switch, much of the testing of the MC2854 was used to establish the MC3160's functional and environmental capabilities.

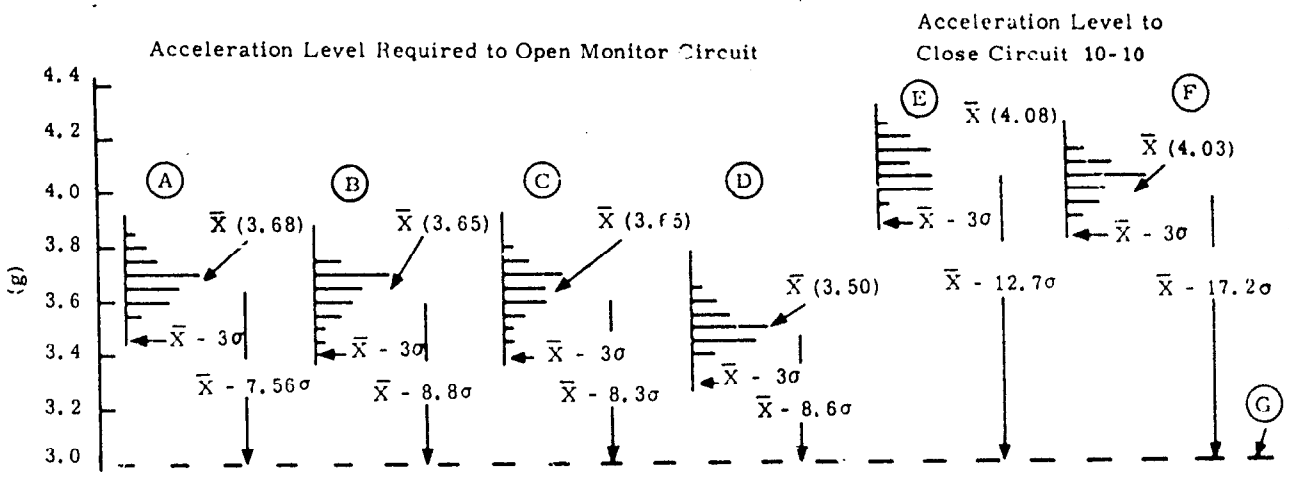

NOTES:

1. Plot (A) is made up of the minimum acceleration values obtained from each of 33 pilot production units tested in 3 orientations during in-process and 100% tests.
2. Plot (B) is made up of the minimum acceleration values obtained from each of 18 pilot production units tested in 4 orientations at Sandia.
3. Plot (C) is made up of the minimum acceleration values obtained from each of 18 pilot production units tested in 3 orientations at Sandia.
4. Plot (D) is made up of the minimum values obtained from each of 18 pilot production units tested with a 0-g side load.
5. Plot (E) is made up of the minimum values obtained from each of 18 pilot production units tested in 4 orientations at Sandia.
6. Plot (F) is made up of the minimum values obtained from each of 18 pilot production units tested with a 0-g side load.
7. (G) represents the specified minimum No-Go level of 3.0 g.

Figure 10. MC3160 Static Acceleration Tests on Pilot Production Lot 1

Table 5 summarizes the Curve B production acceptance and lot sample test results for times to NO circuit 10-10 closure for pilot production lot 1 units. Figure 12 shows plots of the 100% and lot sample test results. Figure 13 shows the 100% and lot sample test results for the 10-g Curve B time to crowbar circuit 2-3 opening.

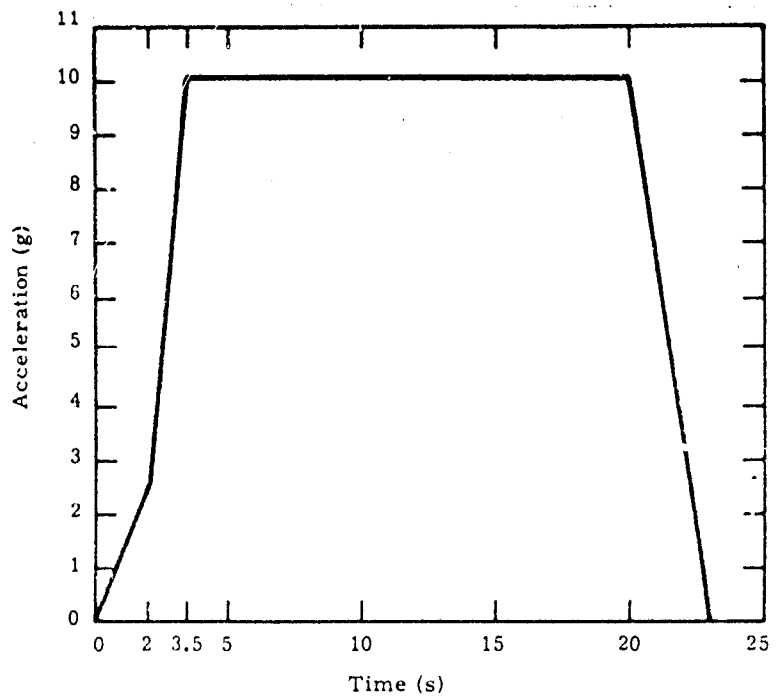

Figure 11. MC3160 Curve B, 10-g Test Profile

Figure 14 shows the average g-s vs acceleration-characteristic-shaped curves from 5 g to 20 g with step-function input acceleration levels at room temperature and at 145°F for a group of four pilot production lot 1 units.

Figure 15 shows the g-s to NO circuit 10-10 closure obtained on pilot lot 1 units at various temperatures with a step input acceleration of 10 g. Also shown are the predicted minimum and lower 3.5 σ level values vs temperature in relation to the use requirement. Figure 16 shows the same information with a step input of 8 g.

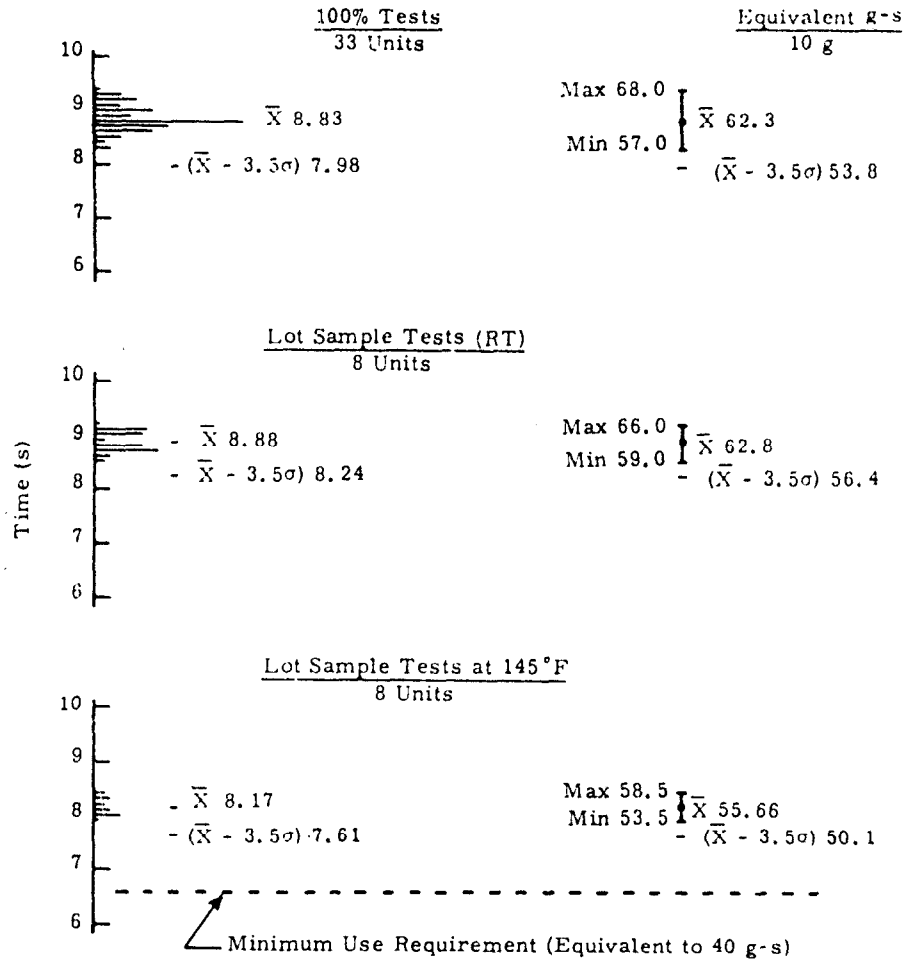

NOTE: The equivalent g-s at 8 g will be about 0.5 to 1.0 g-s less than that at 10 g.

Figure 12. MC3160 Pilot Production Lot 1, Curve B, 10-g Times to Closure of NO Electrical Circuit 10-10

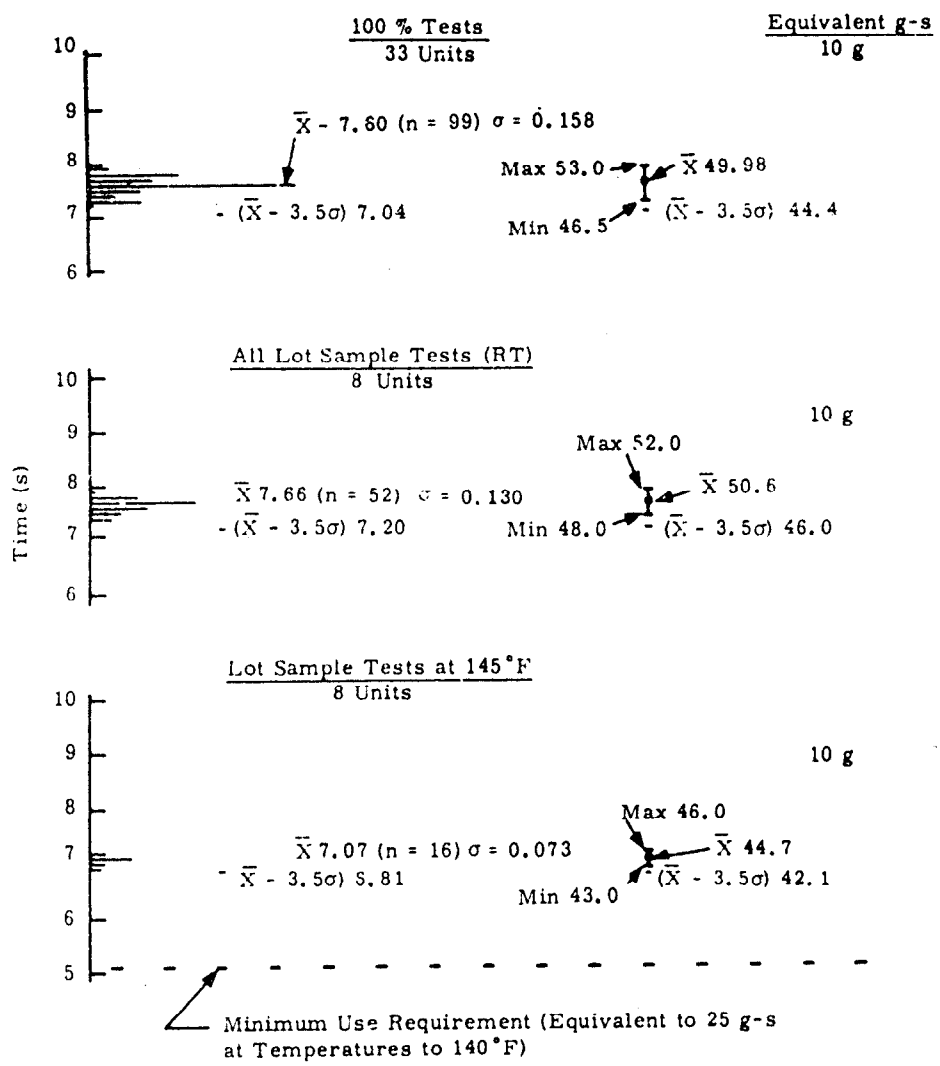

NOTE: Equivalent g-s at 8 g will be about 1 g-s or less lower than at 10 g.

Figure 13. MC3160 Pilot Production Lot 1, Curve B, 10-g Times to Opening of Crowbar Circuit

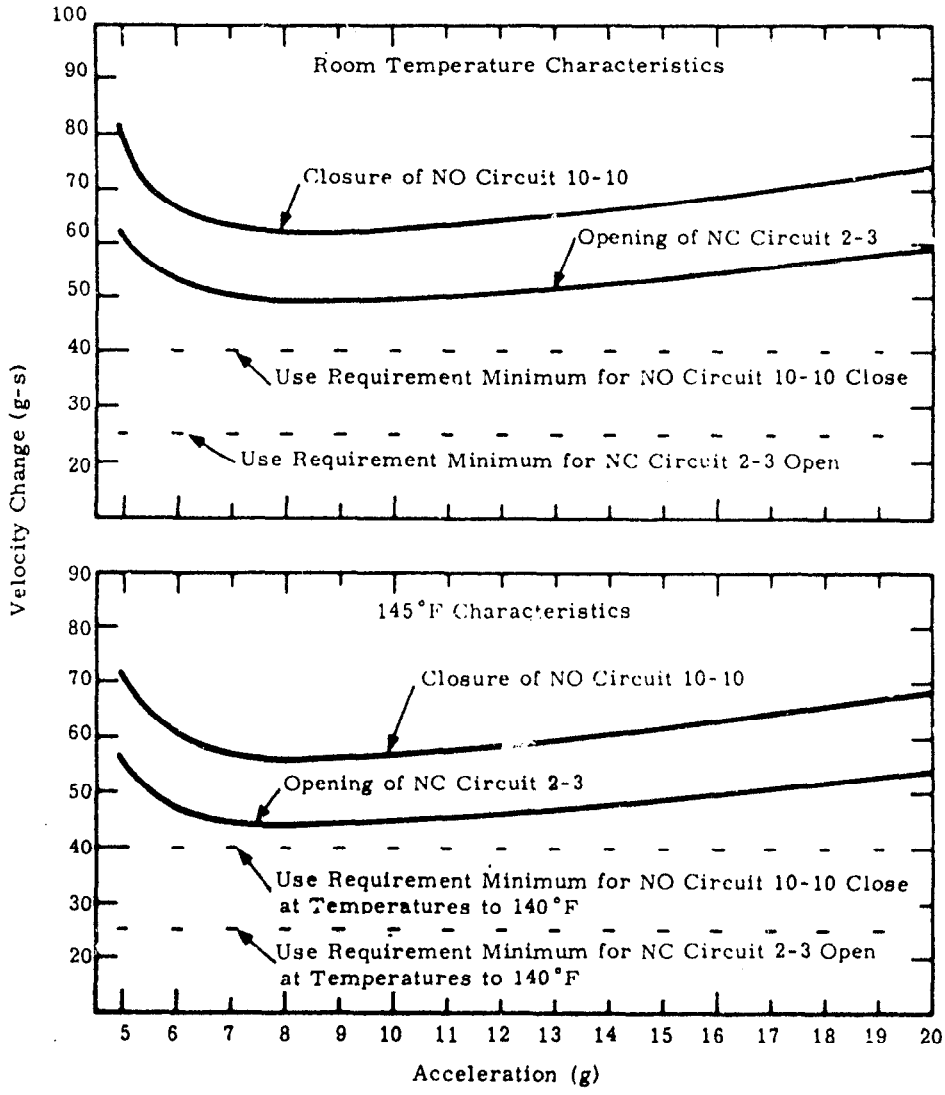

Figure 14. Acceleration vs g-s Relationship Between NC Crowbar Circuit 2-3 and NO Electrical Circuit 10-10

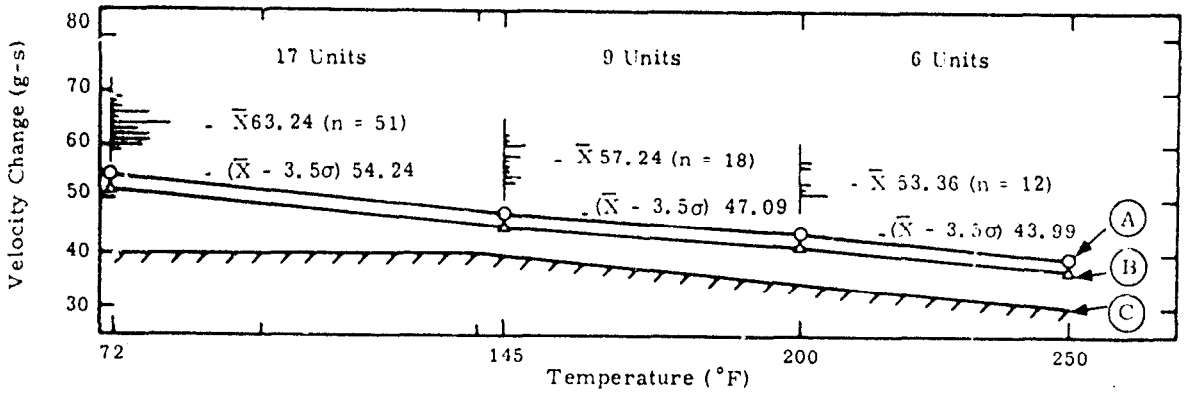

NOTES:

1. Plots of data obtained from step-function testing with a flop-fixture. All units tested were from pilot production lot 1.
2. Based on test data and math model analyses, it is predicted that an MC3160 accepted in accordance with the product acceptance specification requirements, will not operate below Curve (A) regardless of input acceleration or component orientation and that the $\bar{X}$-3.5 σ value of its operate g-s products will not be less than Curve (B).
3. Curve (C) is the specified minimum operating g-s requirement.

Figure 15. Comparison of Operate Characteristics With Step-Function Input of 10 g to System Requirements

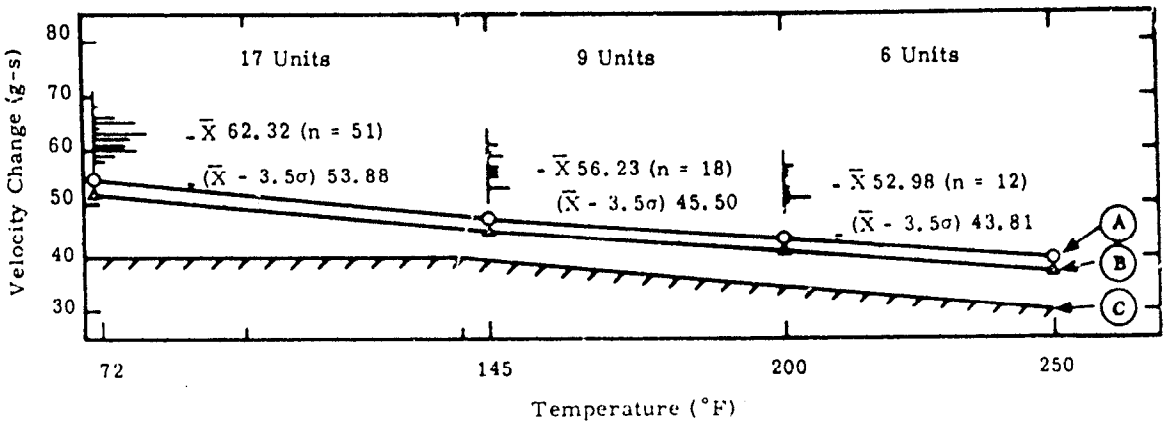

NOTES:

1. Plots of data obtained from step-function testing with a flop-fixture. All units tested were from pilot production lot 1.
2. Based on test data and math model analyses, it is predicted that an MC3160 accepted in accordance with the product acceptance specification requirements, will not operate below Curve (A) regardless of input acceleration or component orientation and that the $\bar{X}$-3.5σ value of its operate g-s products will not be less than Curve (B).
3. Curve (C) is the specified minimum operating g-s requirement.

Figure 16. Comparison of Operate Characteristics With Step-Function Input of 8 g to System Requirements

TABLE 5

Analysis of Curve B, 10-g NO Electrical Circuit 10-10 Closure Times for Pilot Production Lot 1*

			Curve B, 10-g Acceptance Tests						
			Curve B Operate Time (s)				Equivalent* (g-s at 10 g)		
Test	Data Points	Component Orientation (°)	$\bar{X}$	σ	Min	$\bar{X}$-3.5σ	$\bar{X}$	Min	$\bar{X}$-3.5σ
Curve B, 10-g Acceptance Tests - 33 Units									
In-process	66	180	8.86	0.219	8.44	8.09	62.6	58.4	54.9
In-process	66	0	8.32	0.228	8.34	8.02	62.2	57.4	54.2
100%	99	90	8.83	0.242	8.31	7.98	62.3	57.1	53.8
		Composite of 3 orientations	8.84	0.233	8.31	8.02	62.4	57.1	54.2
Curve B, 10-g Lot Sample Tests at Room Tempertature - 8 Units									
Lot Sample	60	90	8.88	0.184	8.52	8.24	62.8	59.2	56.4
Curve B, 10-g Lot Sample Tests at 145°F - 8 Units									
Lot Sample	16	90	8.17	0.158	7.96	7.61	55.66	53.6	50.1

*Equivalent g-s at 8 g will be approximately 0.5 to 1.0 g-s less than at 10 g.

Figure 17 shows the velocity change in g-s required to open the crowbar circuit with step input accelerations of 8 g and 10 g at room temperature and 145°F. These data demonstrate the capability has substantial margin in relation to the requirement of 25 g-s minimum at temperatures to 140°F.

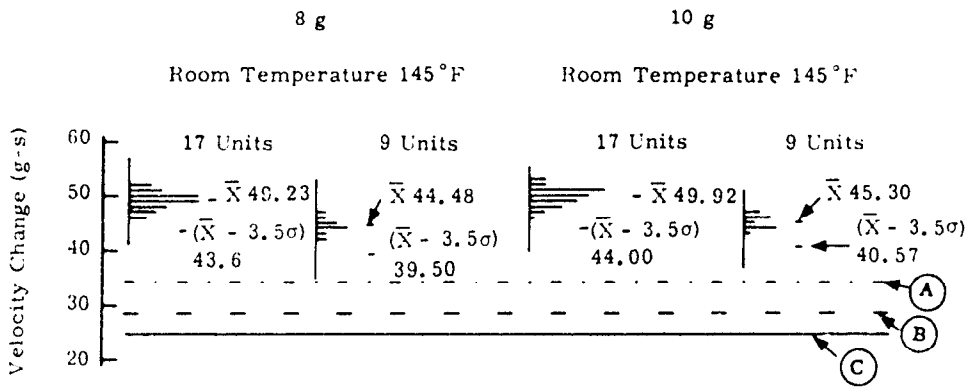

NOTES:

1. Line (A) is the math model prediction of the minimum g-s product at 145°F of an MC3160 with all component tolerances at the extreme (i.e., maximum orifice diameter, maximum piston-cylinder clearance, minimum allowable piston stroke to crowbar circuit open, and minimum resisting force (spring force plus friction).
2. Line (B) is the math model prediction of the minimum g-s product at 250°F of an MC3160 with all component tolerances at the extreme.
3. Line (C) is the minimum use requirement nonoperate g-s level for the crowbar circuit at temperatures to 140°F.

Figure 17. Step-Function Characteristics of MC3160 to Crowbar Circuit 2-3 Open

Computer mathematical model predictions for g-s products to NO circuit 10-10 closure for extended input acceleration levels to 10,000 g indicate that the MC3160 has substantial margin in relation to the requirements at these higher acceleration levels at temperatures to 140°F.

3.2.2.3 Reset Capability

Each unit is tested to ensure that the spring has not been decoupled at circuit 10-10 closure. During in-process Instron testing, this characteristic is monitored with the component mounted vertically with the weight of the piston supported by the spring. In this position, the spring must reset the unit (close NC monitor circuit 11-12) from the point where NO circuit 10-10 closes. In addition, during 100% tests with the component mounted on its side on the centrifuge, the unit must reset from the NO circuit 10-10 closure point against 0.5-g applied acceleration.

Additional tests are made to retain demonstrated margin in ability to reset in the event the piston is moved from its reset position during handling or transportation environments. The minimum net force available for resetting is controlled during in-process Instron testing, and each unit (during 100% testing) must reset from approximately its midstroke position against 1.5-g applied acceleration.

3.2.3 Storage Life

Electron beam or tungsten inert gas welds close the MC3160's external joints. The electrical feedthrough terminals are glass-to-metal hermetic seals. Prior to filling with the silicone metering fluid, each unit is helium-leak tested on a Veeco MS12 or MS17 helium-leak detection tester. This test verifies the hermeticity of the entire component with the exception of the seal cup which is welded over the seal screw used to close the oil fill hole. The sensitivity of the helium-leak test is about two orders of magnitude better than that of the gas chromatograph that tests for oil leaks.

To enhance the long-term storage capability, the materials selected for the MC3160 are essentially inert and, with the exception of the silicone O-rings and metering fluid, inorganic.

The storage life capability of the MC3160 is expected to be about the same as that of earlier silicone-fluid-filled devices. Data obtained from long-term storage programs on the MC1441 (13 years), MC2034 (7 years), and the MC2560 (3 years) indicate no significant changes in functional characteristics or weight.

A filled MC3160 contains approximately 16.5 cm^3 of silicone fluid. Eight-tenths of a cubic centimeter is 0.65-centistoke (cs) fluid used for leak detection and the balance is 20-cs metering fluid. Since the 20-cs fluid is not detectable by the gas chromatograph, the total leak must be inferred from the 0.65-cs fluid leak rate. In the case of a molecular leak (about 1.0×10^{-10} cm^3/s of the 0.65-cs fluid), the 20-cs fluid theoretically contributes less than 1% to the measured leak rate.

The MC3160 is designed to ensure an essentially zero rate of fluid leakage. In accordance with that intent, if a unit were accepted with a constant leak rate of 0.5×10^{-10} cm^3/s (the maximum allowable leak rate for 100% acceptance), it would require approximately 50.7 years to lose all of the 0.65-cs fluid (0.8 cm^3).

Upon completion of the oil-fill operation, the piston-engagement end of the detent feature (attached to the closed terminal of the accumulator bellows assembly) is separated from the inertial piston by a minimum of 0.122 in. Loss of all of the 0.65-cs tracer fluid would produce an accumulator-bellows stroke of 0.083 in, providing a detent piston separation of 0.049 in. The design and construction of the accumulator bellows has the characteristic of changing its position on the oil column approximately 0.001 in for each degree change in the temperature (Farenheit) of the fill fluid (i.e., if the temperature of the fluid inside the switch decreased by 10°F, the bellows assembly and the detent feature would move 0.010 in closer to the floor of the accumulator tower). Therefore, if the above unit has been filled at 80°F and if it

had leaked all of the tracer fluid, the piston-detent separation during a launch at the minimum launch temperature of 60°F would still be 0.029 in. A constant leak rate of 1.268×10^{-9} cm^3/s for 20 years would be required to lose all of the tracer fluid. Since the accumulator bellows rests on the oil column and follows its fluctuations (either from temperature or fluid loss), no discernible change in component function as a result of an acceptable fluid leak is expected over the 20-year storage period.

3.2.4 Electrical Resistance

With the MC3160 in either the reset or actuated position, the electrical resistance between any electrical circuit and all other electrical circuits and the component case must be 15 MΩ minimum with 600 Vdc applied. The insulation value typically runs greater than 1000 MΩ with 1000 Vdc applied. The input-to-output circuit resistance of any of the eight NO circuits (closed) is 0.065 Ω maximum during 100% acceptance tests and 0.085 Ω maximum during and following lot sample tests. The use requirement is 0.115 Ω maximum. Throughout the program, this resistance typically ranged from 0.035 to 0.063 Ω under all environmental test conditions. The crowbar circuit resistance requirement is 10 Ω maximum at room temperature while carrying 0.050 A of current and 100 Ω maximum under abnormal environments. The crowbar circuit resistance varied between 0.040 and 0.054 Ω during 100% and lot sample testing. Four MC3160s have been exposed to 20-g sinusoidal vibration for 3 hours with crowbar circuit resistance values ranging to 0.060 Ω. A total of 10 MC3160s have been subjected to mechanical shocks, applied along all axis, ranging from 2500 to 11,600 g. In no instance did any crowbar circuit resistance exceed 0.063 Ω following the shock application. Four MC3160s have been exposed to temperatures of up to 1109°F. The resistance of the crowbar circuit was continuously monitored and did not exceed 0.080 Ω during these exposures. MC2854 and MC3160 components (including crowbar circuits) have been tested while carrying currents up to 50 A and no significant change in their normal circuit

resistance has been detected. The NC monitor circuit 11-12 must have a maximum input-to-output resistance of 5.0 Ω maximum when measured with 6 Vdc and 100 mA. Throughout the component test program, this resistance typically ran from about 0.070 to 0.300 Ω. Table 6 contains a summary of circuit resistance values measured throughout the MC3160 test program. These data indicate that the MC3160 can meet the electrical requirements of the W78 application with considerable margin.

3.2.5 Contact Chatter

When the MC3160 in the reset condition is exposed to a sine vibration environment of 10 g from 100 to 1000 Hz and 5 g from 1000 to 2000 Hz, the NC crowbar circuit is not subject to accumulated opening(s) in excess of 50 μs in any 1500-μs period. The chatter threshold is 50 Ω. When the MC3160 in the actuated condition is exposed to a random vibration having a power spectral density of 0.1 g^2/Hz from 20 to 750 Hz, decreasing to 0.01 g^2/Hz at 1000 Hz and remaining at this level to 2000 Hz, NO circuits 4 and 5 in parallel and in series with 8 and 9 in parallel are not subject to opening(s) in excess of 2 μs in any 1-ms period.

Eight randomly selected lot sample units from each lot are exposed to these vibration requirements (four each to sine vibration reset and four to random vibration actuated) and checked for accumulated contact chatter of the specified circuits. Ten MC3160 development and pilot lot 1 units have also been tested in the above environments with no indicated chatter in either condition. Four MC3160 development models have been subjected to 20-g sine vibration tests and one unit was subjected to 40-g sine vibration, all without chatter of circuit 2-3. Four MC3160s have been subjected to random vibration environments to 0.2 g^2/Hz to 2000 Hz with no chatter detected on the closed NO contacts. These tests indicate a substantial margin relative to the maximum power spectral density specified for powered and ballistic flight. The sinusoidal vibration overtests also indicate the crowbar circuit has considerable margin relative to the specified maximum sinusoidal environments.

TABLE 6

Input-to-Output Electrical Resistance of the MC3160 Circuits

Build	100% Acceptance Tests			Lot Sample Tests: Low Temp (-25°F)			High Temp (140°F)			Posttemperature			Postlife (50)		
	n	$\bar{X}$	Range	n	$\bar{X}$	Range	n	$\bar{X}$	Range	n	$\bar{X}$	Range	n	$\bar{X}$	Range
Eight No Circuits															
3B	256	0.044	0.038-0.056	32	0.042	0.037-0.049	32	0.046	0.042-0.052	32	0.044	0.040-0.051	16	0.045	0.042-0.049
4B	304	0.046	0.041-0.063	32	0.043	0.038-0.054	32	0.047	0.043-0.051	32	0.044	0.039-0.048	16	0.045	0.042-0.049
PP1	512	0.042	0.037-0.055	64	0.039	0.035-0.043	64	0.045	0.041-0.053	64	0.042	0.038-0.051	32	0.042	0.037-0.049
NC Crowbar Circuit															
3B	32	0.047	0.042-0.050	4	0.045	0.040-0.040	4	0.048	0.042-0.051	4	0.046	0.042-0.047	2	0.045	0.044-0.046
4B	38	0.047	0.043-0.053	4	0.044	0.042-0.046	4	0.048	0.044-0.051	4	0.046	0.045-0.047	2	0.050	0.046-0.054
PP1	68	0.046	0.040-0.054	8	0.044	0.040-0.047	8	0.047	0.045-0.050	8	0.046	0.042-0.049	4	0.048	0.044-0.051
NC Piston Monitor Circuit															
3B	32	0.116	0.069-0.260	4	0.122	0.098-0.136	4	0.138	0.101-0.152	4	0.110	0.078-0.139	2	0.107	0.079-0.113
4B	38	0.113	0.089-0.184	4	0.134	0.087-0.156	4	0.140	0.099-0.162	4	0.109	0.090-0.126	2	0.106	0.092-0.120
PP1	68	0.127	0.098-0.232	8	0.165	0.105-0.274	8	0.147	0.098-0.179	8	0.149	0.105-0.247	4	0.179	0.166-0.192

Build	Lot Sample Tests: Postsine Vib. Reset 3 hours at 10 g			Postmech. Shock Reset 18-300 g Shocks			Postransom Vib. Act. 0.06 g^2/Hz			Postmech. Shock Act. 3-1000 g Shocks		
	n	$\bar{X}$	Range	n	$\bar{X}$	Range	n	$\bar{X}$	Range	n	$\bar{X}$	Range
Eight No Circuits												
3B	16	0.044	0.041-0.049	16	0.045	0.041-0.052	16	0.045	0.043-0.049	16	0.044	0.041-0.045
4B	16	0.043	0.041-0.045	16	0.045	0.042-0.049	16	0.046	0.043-0.050	16	0.045	0.042-0.046
PP1	12	0.041	0.038-0.047	32	0.042	0.038-0.048	32	0.042	0.038-0.051	32	0.042	0.038-0.050
NC Crowbar Circuit												
3B	2	0.046	0.045-0.047	2	0.045	0.044-0.045						
4B	2	0.046	0.045-0.046	2	0.045	0.045-0.047						
PP1	4	0.043	0.041-0.045	4	0.047	0.045-0.049						
NC Piston Monitor Circuit												
3B	2	0.108	0.094-0.121	2	0.106	0.078-0.134						
4B	2	0.145	0.130-0.159	2	0.107	0.101-0.112						
PP1	4	0.157	0.103-0.257	4	0.161	0.115-0.243						

NOTES:

1. n is the number of electrical circuits tested for each environmental condition.
2. The contact assemblies of development lots 3B and 4B were soft soldered with solder per QQS-571, composition SN96.
3. The contact assemblies of pilot production lot 1 and all subsequent production are fused by laser with a Raytheon SS380 (nd) YAG welder.

3.2.6 Handling, Transportation, Storage, and Flight Environments

3.2.6.1 General

Environmental tests indicate that the MC3160 can survive exposure to the specified handling, transportation, and storage environments; the unit also retains the no-operate safety capabilities and functions properly under flight environments. Because of the similarity between the MC2854 and MC3160, environmental test results on the MC2854 are considered to be generally applicable to the MC3160. The main difference is that Curve A operate times of the MC3160 are less sensitive than those of the MC2854 because of the larger driving force.

Test results indicate that these components are not significantly affected by exposure to the specified use environments. During lot sample testing of MC3160 development groups and the pilot production lot (and the final two development groups, two pilot production lots, and the first production lot of the MC2854), there were no instances of failure to meet product acceptance requirements. During lot sample testing, the units usually meet 100% acceptance limits in regard to all characteristics (except Curve B 10 g operate times at high temperature, which are faster). Most of the lot sample units from the above fabrication groups have been subjected to extensive evaluation testing at Sandia following the lot sample test program at Honeywell. In most cases the component characteristics were not significantly different from those measured during the original in-process and 100% acceptance tests. There were only two instances where operate times on Curve A increased significantly on units that had been subjected to mechanical shock tests in the actuated condition (operation following shock in the actuated condition is not a requirement).

While these components are quite rugged in the reset condition, mechanical shocks applied to the unit while it is in the actuated condition can fracture the outer race of the small bearings used in the spring decoupling system. For this reason, the components should not be transported while in the actuated condition and care should be exercised when handling actuated components.

3.2.6.2 Lot Sample Tests

Following are abbreviated descriptions of lot sample tests which are performed on randomly selected units from each production lot to ensure continuing ability of the MC3160 to meet use environmental requirements. Also shown is summary information regarding overtests. A comprehensive summary of tests conducted on the MC3160 is shown in Appendix A.

3.2.6.2.1 Temperature

Eight units from each lot are exposed to 145°F for 2 hours minimum. At 145°F they are tested for insulation resistance with 1000 Vdc applied, 3.1-g No-Go, PAG, Curve B 10-g operate time, reverse acceleration while latched, NC and NO circuit resistance, and ability to reset against 1.0-g applied acceleration. The units are then exposed to 190°F for 12 hours minimum and then to -25°F for 2 hours minimum. While at -25°F, the units are tested for 3.1-g No-Go, NC and NO circuit resistance, and ability to reset against 1.0 g. (Circuit resistance of the NO circuits and the monitor circuit at -25°F is not a use requirement. This check is performed as a quality control measure to detect the presence of certain types of contaminating films.) The units are then subjected to three 1-hour cycles at -40°F and 1 hour at 190°F. Upon completion of the temperature cycle test and after being stabilized at room temperature, the units are tested for 1000 Vdc insulation resistance, 3.1-g No-Go, PAG, Curve A and Curve B operate times, NO and NC circuit resistance, and the ability to reset against 1 g.

3.2.6.2.2 Life

Four units are actuated 50 times on the 10-g Curve B profile. After each 10 actuations, each unit is tested for Curve A operate time and the NO circuit resistances. Following the fiftieth actuation, each unit is also tested for 1000 Vdc insulation resistance, reset ability against 1.0 g, 3.1-g No-Go, PAG, and NC circuit resistance.

During overtests, six MC3160 and four MC2854 development units were tested to 150 actuations and met specification requirements.

3.2.6.3 Mechanical Shock and Vibration (Component in Reset Condition)

Four units from each lot are subjected to the following shock test; four other units from each lot are subjected to the following vibration tests. After exposure to the shock and vibration environments, each unit is tested for 1000 Vdc insulation resistance, 3.1-g No-Go, PAG, Curve A and Curve B operate times, NC and NO circuit resistance, and ability to reset against 1 g.

3.2.6.3.1 Mechanical Shock

Three shock pulses, each approximating a haversine wave having a faired amplitude of 300 g and a duration of 2.5 ms, were applied in both directions along each major axis (Figure 4). The total number of shocks was 18.

Three MC3160s and 7 MC2854s were overtested by applying one 2500-g shock of 62-ms duration along each axis; all units met specification requirements. Six MC2854s and five MC3160s were exposed to 10,000-g, 0.5-ms abnormal environment safety tests; all units operated within specification requirements.

3.2.6.3.2 Sinusoidal Vibration

Vibration is applied for 1 hour along each major axis over the frequency range from 10 to 2000 Hz with a double amplitude of 0.2 in. from 10 to 31 Hz and 10 g from 31 to 2000 Hz. During exposure to the vibration, the crowbar circuit is continuously monitored for contact chatter. No more than 33 μs in any 1-ms period at a threshold of 50 Ω is permissible. Two MC3160 and five MC2854 development units were overtested to 3 hours of sinusoidal vibration at 20 g over the above frequency range and met specification requirements afterwards.

3.2.6.4 Mechanical Dynamic Environments (Component in Actuated Condition)

The above four units that were subjected to sinusoidal vibration are then subjected to the following shock test; the other four units which were exposed to the mechanical shock test in the reset condition are exposed to the following complex-wave vibration test. After being exposed to these environments, each unit is subjected to three tests: (1) reverse acceleration of 100 g, (2) insulation resistance at 1000 Vdc, and (3) input-to-output circuit resistance of the NO electrical circuits.

3.2.6.4.1 Mechanical Shock

An 800-g, 1.0-ms shock pulse is applied in each direction along the longitudinal axis; then a 1000-g, 0.33-ms shock pulse is applied in the plus direction of the other two major axes (Figure 4).

Four MC3160 and eight MC2854 development units were overtested to 1500 g, 0.9- to 1.0-ms shock pulses applied in both directions of each major axis. The units met specified requirements following these tests.

3.2.6.4.2 Complex-Wave Vibration

The MC3160 is exposed to random vibration with a power spectral density of 0.1 g^2/Hz from 20 to 750 Hz, decreasing to 0.01 g^2/Hz at

1000 Hz and maintaining 0.01 g^2/Hz from 1000 to 2000 Hz, applied for 1 min along each major axis (total time of 3 min). NO circuits 4-4 and 5-5 in parallel and in series with circuits 8-8 and 9-9 in parallel are continuously monitored for contact chatter. No more than 2 μs of chatter in any 1-ms period at a threshold of 50 Ω is permissible.

Four MC3160 and ten MC2854 development models were overtested to 0.2 g^2/Hz from 20 to 750 Hz decreasing to 0.02 g^2/Hz at 1000 Hz, and maintaining 0.02 g^2/Hz over the range of 20 to 2000 Hz. All units met specified requirements following the vibration tests.

3.2.6.5 Reverse Steady-State Acceleration

Following each Curve A actuation test throughout all in-process, 100%, and lot sample tests, reverse acceleration is applied to demonstrate that the unit remains latched in the actuated condition. The acceleration level is 10 g for most tests; however, during 100% tests each unit is checked once with 100 g applied. Following the vibration and mechanical shock lot sample tests with the unit actuated, 100 g is applied.

3.2.7 Abnormal Environments

The results of tests conducted to demonstrate the ability of the MC3160 to perform as required during exposure to the required abnormal environments, are given below. The results of safety tests conducted on the MC2854 under abnormal environments are included in this report. The MC3160 is a modification of the MC2854, and tests performed on the MC2854 are considered to be applicable to the MC3160.

3.2.7.1 Electrical Isolation at Room Temperature

As part of the 100% acceptance tests, each MC3160 is checked for electrical isolation using the test circuit of Figure 1. With the unit in the reset condition, 2500 Vdc is applied between the input terminals and

the component case. A simulated system load resistance (12 MΩ) is connected between the output terminals and the component case. Under these conditions, the leakage current through the MC3160 must be such that no more than 40 V is developed across the load resistance and no electrical breakdowns to the component case occur on the component input end. To date, 68 MC3160s (35 development and 33 pilot units) and 211 MC2854s (93 development, 63 pilot production, and 55 production) have been subjected to this test without failure. No significant voltage has been detected across the output load (less than 250 mV).

3.2.7.2 Electrical Isolation in a Fire Environment

The MC3160 and MC2854 components in the reset position must provide electrical isolation between input and output terminals under the conditions of temperature and applied voltage shown below. This isolation must be such that no more than 40 V will appear across a 12-MΩ load resistor connected between the output terminal of the electrical circuit under test and component ground as shown in Figure 1.

	Applied Voltage (Vdc)	Temperature (°F)
MC2854	up to 2000	to 600
	up to 500	600 to 800
MC3160	up to 2000	to 1000

Electrical breakdowns on the component input side to component case are permissible on both the MC2854 and MC3160.

High-temperature, simulated fire tests were conducted on four MC2854s and five MC3160s using the test circuit shown in Figure 1. By using the 84 NO circuits available on the nine components, we made a total

of 224 tests on individual circuits at various voltages at temperatures ranging from room temperature to as high as 1120°F on some circuits. These components will withstand at least 2500 Vdc applied between an input terminal and case at room temperature without voltage breakdown; however, as the temperature is increased, the voltage breakdown level becomes progressively less. During the test series, the range of breakdown voltage on the input side was about 1000 to 2000 V at temperatures near 600°F, 500 to 1200 V at temperatures near 800°F, and about 100 to 500 V at temperatures near 1000°F. Two types of tests were performed at various temperatures: In the first type, a specific level of input voltage was applied (without breakdown) and the voltage across the load measured; in the other type, the input voltage was increased until breakdown occurred with the voltage across the load measured continuously.

A summary of a number of the tests conducted and the applied voltages for various high-temperature ranges follows:

Temperature Test Range (°F)	Number of Tests on Individual Circuits	Applied Voltage (Vdc)
402-585	14	2000 or greater
	2	1000
	1	500
590-773	15	500
	24	To breakdown or 2000 V, whichever occurred first; breakdown ranged from 1300 to 2000 V; 18 tested at 2000 V.
795-886	31	500
	17	To breakdown (ranged from 600-1200 V)
1000-1054	21	To breakdown (ranged from 130-500 V)
1100-1120	16	To breakdown (ranged from 100-500 V)

Throughout this test series, the voltage developed across the simulated load did not exceed 0.25 V (as compared with 40-V maximum use requirement).

The thermal detent operated properly on each of the nine components. The circuit resistance of the crowbar circuit in the five MC3160s was measured at various temperatures throughout each test. Two were tested to 800°F and three were tested to 1000°F or higher. The circuit resistance did not exceed 0.081 Ω at temperatures up to 1000°F (as compared with the maximum use requirement of 100 Ω).

3.2.7.3 High-Acceleration Mechanical Shock at Room Temperature

Five MC3160 and 11 MC2854 components in the reset condition have been subjected to shocks of 10,000 g or greater with durations of approximately 0.5 ms. On all 16 components, shocks were applied along the longitudinal axis in the direction which would cause actuation. One MC3160 from the in-house fabrication was subjected to one shock applied in each direction along each major axis (total of six shocks). Each shock pulse approximated a haversine wave with a faired amplitude of 10,000 g and a duration of 0.5 ms. There were no safety failures. Crowbar circuit resistance ranged from 0.049 to 0.057 Ω throughout the test. The unit was functional following the shock tests.

One development phase 3B MC3160 was subjected to one shock applied in each direction along each major axis (total of six shocks). Each shock pulse approximated a haversine wave with amplitudes ranging from 8000 to 11,600 g with durations of 0.5 ms. There were no safety failures. The crowbar circuit resistance ranged from 0.051 to 0.058 Ω throughout the test. The 11,600-g shock was applied in the direction to cause actuation. The unit was functional following the shock tests.

One development phase 4B MC3160 was subjected to one shock applied in each direction along each major axis (total of six shocks). Each shock pulse approximated a haversine wave having faired amplitudes from 10,000 to 11,600 g and durations of 0.4 ms. There were no safety

failures. The crowbar circuit resistance ranged from 0.040 to 0.046 Ω throughout the test. The unit was functional after the shock tests.

Two pilot production lot 1 MC3160 units were subjected to one shock applied along the longitudinal axis in the direction to actuate the units, and one shock was applied along each transverse axis (total of three shocks). Each shock pulse approximated a haversine wave with amplitudes of 10,000 g and durations of 0.5 ms. There were no safety failures. Both units were functional after the shock tests. The crowbar circuit resistance ranged from 0.045 to 0.055 Ω throughout the shock tests.

Ten MC2854 units (two-in-house fabrication, one phase 2A, one phase 2B, two phase 2C, two pilot production lot 1, and two production lot 3) were subjected to shock pulses applied along the longitudinal axis in the direction to actuate and along each major transverse axis. The shock pulses approximated haversine waves having faired amplitudes ranging from 5000 to 12,000 g with durations from 0.5 to 1 ms. There were no safety failures. Nine of the units were functional following the shock tests. One unit from the in-house fabrication was functional up to the sixth shock of 12,000 g applied in the direction to actuate, which produced a failure of the supporting flange of the tungsten sleeve (material in both the MC2854 and MC3160 was changed to 15-5 stainless). One MC2854 from the in-house fabrication was subjected to two shock pulses applied along the longitudinal axis in the direction to actuate the unit. Each shock approximated a haversine wave having faired amplitudes of 10,800 g and 22,000 g with durations of 0.7 and 0.9 ms, respectively. There were no safety failures. The unit was not functional after the 22,000-g shock.

The MC3160 has an internal detent to lock the inertial piston in the safe position in a fire environment, or if the metering fluid is lost for any reason. Three MC2854s and one MC3160 (without metering fluid) were subjected to longitudinal shocks applied in the direction to actuate. Two units maintained the NO circuits in an open circuit condition under shocks of 8000 and 9200 g. Momentary closure of circuit 10-10 was noted

on the other two units during shock applications of 9025 and 10,114 g. All NO circuits were open following shock applications; however, circuit 10-10 could be reclosed by application of a steady-state acceleration of 300 g on the unit which saw the 9025-g shock, and with 100 g on the unit which saw the 10,114-g shock. No other NO circuits could be closed. Calculations and results of these tests indicate the detent shock level capability in the absence of metering fluid to be about 8000 to 9000 g.

3.2.7.4 High-Acceleration Mechanical Shock at High Temperature

One MC3160 and two MC2854 components in the reset condition (without metering fluid) were subjected to mechanical shocks from 5000 to 5200 g having 1.0 ms durations. These shocks were applied along the longitudinal axis in the direction to actuate the units at temperatures ranging from 600° to 670°F. There were no closures of any NO circuits. Circuit resistance of the crowbar circuit in the MC3160 was 0.063 Ω following the shock test.

3.2.7.5 Crush

Three MC2854s and one MC3160 were subjected to crush tests along the longitudinal and transverse axes. One development phase 2C MC2854 required a transverse crush of 87,000 lb to produce a short to ground on the reset end. Another development phase 2C MC2854 required a longitudinal crush force of 40,000 lb to close NO circuit 10-10. A pilot production MC3160 unit required a transverse crush force of 52,500 lb to open the crowbar circuit and 52,770 lb to produce a short to ground on the reset end. A production lot 3 MC2854 required a longitudinal crush force of 27,500 lb to close NO circuit 10-10. In response to a system request during the MC2854 development group 2C fabrication, we removed material from the component cylinder (the MC3160 uses the same cylinder) to reduce component weight. Removing the material resulted in a lower crush capability as noted above.

3.2.8 Reliability

The reliability prediction for the MC3160 is considered to be the same as that for the MC2854:

Event	Probability
Probability that the inertial piston will operate and latch given the required acceleration and velocity change	0.9991
Probability that any NO circuit will be closed given an actuated and latched piston.	0.99994

4. DEVELOPMENT HISTORY

4.1 Design Initiation

In September 1974 we received a request from the W78 Development Division to develop the MC2854 as the launch accelerometer for the W78/Mk 12A. In August 1975, the W78 Development Division requested a modified MC2854 for the W78 application. The requested modification consisted of (1) reducing the number of NO electrical circuits from 10 to 8, (2) converting the other two circuits to a late-opening NC circuit (referred to as a crowbar circuit), and (3) reversing the nomenclature of electrical input and output. In addition, the input terminal pins were not flattened as they were in the MC2854 (to reduce contact drag friction force), and the bias spring force was increased. The increase in spring force allowed direct use of the monitor circuit open acceleration level to check the 3.0-g No-Go characteristics which simplified testing and allowed variable data measurements. It also achieved a better balance of margins in respect to 3-g No-Go ability to reset against 1-g acceleration, and operate on the launch curves. The increase in friction drag and spring force slightly increased the minimum g-s No-Go capability, but could be tolerated for launch acceleration because of the greater net driving force available in the W78 applications.

The modified component became the MC3160. It was integrated into the MC2854 development fabrication program in its later phases. For purposes of this report, only those phases of development history pertaining directly to the MC3160 will be covered.

4.2 Prototypes

Seven in-house prototype MC3160 switches were built from hardware obtained from the MC2854 development fabrication phase 2C. Bias springs and crowbar circuit hardware were fabricated locally. Extensive evaluation of the operate capabilities to the W78 application requirements and the crowbar circuit characteristics were performed on these prototypes. Two were supplied for early material requirement schedule (MRS) needs which called for units containing the crowbar circuit feature.

4.3 Development Fabrication and Preparation for Production

Fabrication and testing of MC3160 development models and preparation of tooling and processes unique to the MC3160 were incorporated into the existing supplier contracts on the MC2854 by contract changes. Two MC3160 development model fabrication phases (3B and 4B) were established.

Sixteen models (nine of which were supplied for MRS requirements) were built and tested in development group 3B. No significant problems were encountered. Variation in operate characteristics as a function of unit test orientation (similar to the MC2854 group 3A) was noted (Appendix B).

Development group 4B consisted of 19 models (12 of which were furnished for MRS requirements). Minor problems were encountered in electrical contact gap adjustment following the contact heat treat operation. The same component test orientation effect seen with group 3B was experienced with this fabrication.

4.4 Pilot Production

Thirty-three units were assembled and subjected to the in-process and 100% acceptance tests. Eight units were subjected to the lot sample tests. All units functioned within the product specification limits during performance of these tests. Tool-made sample (TMS) evaluation was performed on this lot. An unconditional TMS approval was accomplished and first production unit (FPU) occurred in August 1977. Ten diamond-stamped units were shipped to the next assembly area.

Instron tests on these units showed higher forces and wider hysteresis loops than normal. Most of the frictional force increase was traced to a problem with the contact surfaces of the feed-through terminals. These surfaces had not been masked during the scale-removal operations at the header supplier and were very rough.

This was the first group of MC3160s that incorporated procedures to control the orientation effect (Appendix B). Analysis of the production acceptance test data and results from special tests conducted on 18 of the units from this lot indicate that the objective was achieved.

5. MC2854/MC3160 INERTIAL SWITCH DEVELOPMENT PROGRAM CHRONOLOGY

March 1972	MC2854 concept and designation assigned to launch ESD for Undersea Long Range Missile Systems (ULMS)
December 1973	Phase 3 development request for MC2854 for launch ESD
April 1974	MC2854 prototype in-house fabrication initiated (49 units)

September	Phase 3 development request for MC2854 for launch ESD for second application
November	Three-phase (70 units) development support contract for the MC2854 placed: Phase 1 - 10 units Phase 2A - 10 units Phase 2B - 20 units Phase 3A - 10 units Phase 3B - 20 units
March 1975	Development phase 1 (10 units) 100% tests complete
April	In-house fabrication of the last 36 units complete
May	Supplier phase 2A (10 units) 100% tests complete
August	Phase 3 development request for modified MC2854 containing a crowbar function for second application MC3160 concept with crowbar function assigned to launch ESD for second application Supplier phase 2B (20 units) 100% tests complete

October — MC2854 development support contract revised to incorporate the MC3160 and to increase the number of units from 70 to 110:

Phase 1 - 10 MC2854s
Phase 2A - 10 MC2854s
Phase 2B - 20 MC2854s
Phase 2C - 20 MC2854s
Phase 3A - 25 MC2854s
Phase 3B - 25 MC3160s

November — Complete MC2854 advanced engineering release (AER)

Supplier phase 2C (14 units) 100% tests complete

February 1976 — PT3128 acceptance tester on line

In-house fabrication and testing of seven MC3160 prototypes (parts from development Group 2C) complete

March — Supplier development support contract revised to increase number of units from 110 to 119:

Phase 1 - 10 MC2854s
Phase 2A - 10 MC2854s
Phase 2B - 20 MC2854s
Phase 2C - 14 MC2854s
Phase 3A - 16 MC2854s
Phase 3B - 15 MC3160s
Phase 4A - 16 MC2854s
Phase 4B - 18 MC3160s

Supplier phase 3A (16 units) 100% tests complete

April — Pilot production contract placed:

Lot 1 - 22 MC2854s
Lot 2 - 34 MC2854s
Lot 3 - 30 MC3160s

	Supplier phase 3B (16 units) 100% tests complete
June	PT1628 and PT3039 equipment qualification (EQ)
	Supplier phase 4A (17 units) 100% tests complete
July	Supplier phase 4B (18 units) 100% tests complete
August	PT3128 EQd
	Complete MC3160 AER
October	MC2854 pilot production lot 1 (24 units) 100% test complete
November	Bendix production contract for MC2854 placed (251 units)
March 1977	MC2854 complete engineering release (CER)
April	MC2854 pilot production lot 2 (39 units) 100% tests complete
May	MC2854 TMS qualification engineering release (QER)
	MC2854 first production lot (18 units)

June	MC3160 CER
July	MC3160 pilot production lot 1 (33 units) 100% tests complete
August	MC3160 TMS-QER
	MC3160 first production lot (10 diamond-stamped units shipped)

APPENDIX A

MC3160 Evaluation Test Summary

Development work on the MC3160 was accomplished through an in-house prototype fabrication of seven units, one 35-model two-phase development support program, and one 33-model component pilot production program.

Tables A-1 and A-2 provide a reference summary of the evaluation test program for the MC3160 through pilot production. Because of the commonality of the MC2854 and MC3160, appropriate tests performed on the MC2854 which demonstrate a design capability are included. The numbers in parentheses refer to MC2854s of similar fabrication which were tested to the same environments and whose test results were applicable to the MC3160 evaluation.

The tests performed on the MC3160 are listed in the "Tests" column and cross-referenced in the Evaluation Test Summary Notes section by the letter preceding the test identification. For tests A through N, an asterisk (*) in the "Results" column indicates a component test problem. A test subgroup notation (i.e., A-1, B-1, etc.) in the "Notes" column indicates the Test Summary Note which discusses the problem. Absence of an asterisk indicates the test was satisfactory.

For the "Abnormal Environments" and "Additional Tests," the test subgroup notation in the "Notes" column indicates the Evaluation Test Summary Note which discusses the test and the test results. There were no failures of any safety requirement.

TABLE A-1

MC3160 Evaluation Test Summary: In-House Fabrication and Development Phase 3b

Program Fabrication Phase Inclusive Serial Numbers Applicable Test Specification	In-House Fabrication Serial No. 001-007 PS316087 (Issue A)			Development Phase 3B Serial No. 0301-0317 PS316087 (Issue A)		
Tests	No. Tested	Test Results	Notes	No. Tested	Test Results	Notes
A. 100% Functional	7			16		
B. High Temperature	4(14)			4(8)		
C. Low Temperature	4			4(8)		
D. Posttemperature Cycle	4			4(8)		
E. Life	2(2)			2(13)		
F. Mechanical Shock Reset	2(4)			2(12)		
G. Mechanical Shock Actuated				2(16)		
H. Vibration Reset	2(4)			2(16)		
I. Vibration Actuated				2(15)		
Overtests						
J. Life	2(3)			2(3)		
K. Mechanical Shock Reset				2(5)		
L. Mechanical Shock Actuated				2(6)		
M. Vibration Reset				2(5)		
N. Vibration Actuated				2(8)		
Abnormal Environments						
O. Fire	1(1)		O-1	1(2)		O-2
P. High-Acceleration Shock	1(3)		P-1	1(4)		P-2
Q. High Voltage	540(40)		Q-1			Q-1
R. High-Accelration Shock Without Fluid				1		Rb-1
S. Crush				(2)		S-1
Additional Tests						
T. Detent Function						
U. Miscellaneous						

TABLE A-2

MC3160 Evaluation Test Summary: Development Phase 4B and Pilot Production

Program Fabrication Phase Inclusive Serial Numbers Applicable Test Specification	Development Phase 4B Serial No. 0401-0421 PS31608/ (Issue B)			Pilot Production Serial No. 1001-1037 PS31608/ (Issue D)			Total No. Units Tested
Tests	No. Tested	Test Results	Notes	No. Tested	Test Results	Notes	
A. 100% Functional	19			33	*	A-1	75
B. High Temperature	4(8)			8(16)			66
C. Lowtemperature	4(8)			8(16)			52
D. Posttemperature Cycle	4(8)			8(16)			52
E. Life	2(4)			4(8)			37
F. Mechanical Shock Reset	2(4)			4(8)			38
G. Mechanical Shock Actuated	2(4)			4(8)			36
H. Vibration Reset	2(4)			4(8)			42
I. Vibration Actuated	2(4)			4(8)			35
Overtests							
J. Life	2(2)						14
K. Mechanical Shock Reset	2(2)						11
L. Mechanical Shock Actuated	2(2)						12
M. Vibration Reset	2(2)						11
N. Vibration Actuated	2(2)						14
Abnormal Environments							
O. Fire	2(1)		O-3	1		O-4	9
P. High-Acceleration Shock	1		P-3	2(4)		P-4	16
Q. High Voltage	19(17)		Q-1	33(39)			688
R. High-Acceleration Shock Without Fluid				1(5)		Ra-1	7
S. Crush				1(1)		S-2	4
Additional Tests							
T. Detent Function							89
U. Miscellaneous							7

Evaluation Test Summary Notes

A. 100% Functional Test

Each unit in each fabrication was tested to the requirements of the appropriate product acceptance specification issue in force at the time the testing was performed.

A-1. Pilot Production Lot

Hipot problems occurred with the PT3128 slip rings, requiring a new slip-ring assembly. Unit 1029 exhibited a failure-to-actuate indication on Curve A, which was traced to a faulty unit installation in the PT3128 test fixture. All tests were satisfactory.

B. High Temperature

The units were subjected to the standard high-temperature test (145°F) specified by the product specification.

C. Low Temperature

The units were subjected to the standard low-temperature test (-25°F) specified by the product specification.

D. Post-Temperature Cycle

The units were subjected to the standard temperature cycle test (three cycles from 190°F to -40°F with 1 hour minimum at each temperature) specified by the product specification.

E. Life

The units were subjected to the standard life test sequence (50 operational cycles) specified in the product specification.

F. Mechanical Shock Reset

The units were subjected to the standard mechanical shock test in the reset condition (18 shock pulses of 300 g, 2.5 ms, three shocks applied in each direction of each major axis).

G. Mechanical Shcok Actuated

The units were subjected to the standard mechanical shock test in the actuated condition (one shock each in the +X, -X, +Y, and +Z directions of the major axes). Shocks 1 and 2 applied in the +X and -X directions approximated a haversine wave with a faired amplitude of 800 g and a duration of 1.0 ms. Shocks 3 and 4 approximated a haversine wave with a faired amplitude of 1000 g and a duration of 0.33 ms applied in the +Y and +Z directions. The component had to remain actuated.

H. Vibration, Sinusoidal, Reset

The units were subjected to the standard sinusoidal vibration tests in the reset condition (10 g from 31 to 2000 Hz for 1 hour along each major component axis--total of 3 hours of vibration). During vibration exposure, the crowbar circuit (circuit 2-3) shall have no more than 33 μs of accumulated chatter in any 1.0-ms period above a threshold of 50 Ω .

I. Vibration, Complex-Wave, Actuated

The units were subjected to the standard complex-wave vibration test in the actuated condition. The vibration had a power spectral density of 0.1 g^2/Hz from 20 to 750 Hz, decreasing to 0.01 g^2/Hz at 1000 Hz and maintaining 0.01 g^2/Hz to 2000 Hz. During vibration exposure, circuits 4-4 and 5-5 connected in parallel, and in series with circuits 8-8 and 9-9 in parallel, had to have no more than 2 μs of accumulated chatter in any 1 ms period above a threshold of 50 Ω . Vibration time was 60 s along each axis (total vibration time: 3 min).

J. Life Overtests

The units were subjected to the standard life test specified in the product specification, except that the number of operational cycles was extended to 100. Eight MC2854s were tested to 150 operational cycles each.

K. Mechanical Shock Reset Overtest

The units were subjected to the standard mechanical shock test in the reset condition as specified in the product specification. However, the shock-pulse magnitude was 2500 g with durations from 1.0 to 1.2 ms, and one shock pulse (instead of three) was applied in each direction along each major axis (total of 6 shocks). Seven MC2854s were subjected to three 2500-g shocks, with durations from 0.9 to 1.2 ms, in each direction of each major axis (total of 18 shocks).

L. Mechanical Shock Actuated Overtest

The units were subjected to the standard mechanical shock test specified in the product specification except that the shock pulse amplitude was 1500 g with durations of 0.9 to 1.1 ms. Eight MC2854s were also tested to shock pulses of 1500 g applied along the longitudinal axis in the direction to reset the devices.

M. Vibration Reset Overtest

The units were subjected to the standard sinusoidal vibration test specified in the product specification except that the vibration amplitude was 20 g. Seven MC2854s were subjected to 20 g sinusoidal vibration applied for 1 hour along each major axis (total vibration time was 3 hours).

N. Vibration, Complex-Wave, Actuated Overtest

The units were subjected to the standard vibration test in the actuated condition except that the power spectral density was 0.2 g^2/Hz.

O. Simulated Fire Tests

The component being tested in the simulated fire environment was inserted in the high-temperature electrical test circuit below and subjected to simulated fire temperatures. While at various test temperatures, voltage values were applied between the input side of the circuit under test and the component case. Breakdown voltage to the case (across the input glass-to-metal seal) and leakage voltage appearing across the 12-MΩ load were monitored for each voltage application and the temperature at the time of application (Table A-3 through A-6). Proper operation of the thermal detent feature is determined by postmortem following the completion of the test.

TABLE A-3

Phase 2A In-House Fabrication*

No. of Circuits Tested	Test Temperature Range (°F)	Maximum Voltage Applied	Input Breakdown Voltage	Voltage Across Load	Crowbar Circuit Resistance (Ω)
MC3160, SN SC001					
8	RT	2000	> 2000	< 0.25	0.057
1	500	2000	> 2000	0.25	0.057
3	600	1400-1900	1400-1900	0.25	0.057
6	800	500	> 500	0.25	0.081
MC2854, SN SC032					
7	RT	500	> 500	< 0.25	
1	500	500	> 500	< 0.25	
3	600-715	500	> 500	< 0.25	
6	808-820	500	> 500	< 0.25	
2	840-850	500	500	< 0.25	
7	905-930	50	> 50	< 0.25	
1	1015	330	330	< 0.25	
6	1010-1015	50	> 50	< 0.25	

*Detents functioned normally.

TABLE A-4

Phase 3B Development*

No. of Circuits Tested	Test Temperature Range (°F)	Maximum Voltage Applied	Input Breakdown Voltage	Voltage Across Load	Crowbar Circuit Resistance (Ω)
MC3160 SN 305					
8	RT	3000	6, > 3000	< 0.25	0.041
			2, 3000	< 0.25	
1	256-231	2500	> 2500	< 0.25	0.041
2	486-576	2000-2200	2000-2200	< 0.25	0.050
3	696-773	1300-1500	1300-1500	< 0.25	0.050
3	831-886	800-1000	800-1000	< 0.25	0.054
6	1002-1009	130-420	130-420	< 0.25	0.062
MC2854, SN 206					
10	RT	3000	> 3000	< 0.25	
1	151-240	2500	> 2500	< 0.25	
1	279-365	2000	> 2000	< 0.25	
1	402-455	2000	> 2000	< 0.25	
2	468-522	2000	2000	< 0.25	
4	622-640	2000	2000	< 0.25	
2	649-718	500	500	< 0.25	
5	801-806	500	500	< 0.25	
MC2854, SN 224					
10	RT	3200	3200	< 0.25	
1	RT-400	2500	> 2500	< 0.25	
1	438-488	1000	1000	< 0.25	
8	600-630	1900-2300	1900-2300	< 0.25	
10	795	600-1100	600-1100	< 0.25	

*Detents functioned normally

TABLE A-5

Phase 4B Development*

No. of Circuits Tested	Test Temperature Range (°F)	Maximum Voltage Applied	Input Breakdown Voltage	Voltage Across Load	Crowbar Circuit Resistance (Ω)
MC3160, SN 410					
8	RT	3000	> 3000	< 0.25	0.043
1	195-305	2500	> 2500	< 0.25	0.043
2	493-508	2000	1, > 2000	< 0.25	0.051
			1, 2000	< 0.25	
3	604-714	500	> 500	< 0.25	0.055
3	600-611	2000	> 2000	< 0.25	0.052
4	800-808	500	> 500	< 0.25	0.058
3	808	1000-1200	1000-1200	< 0.25	0.058
MC3160, SN 417					
8	RT	3000	> 3000	< 0.25	0.038
2	199-250	2500	> 2500	< 0.25	0.038
1	509-527	2500	> 2500	< 0.25	0.038
2	533-567	2000	2000	< 0.25	0.038
1	572-585	1000	> 1000	< 0.25	0.052
3	590-636	500	> 500	< 0.25	0.052
2	813-864	500	> 500	< 0.25	0.052
3	1000-1017	300-500	> 300-500	< 0.25	0.062
8	1100-1110	100-300	100-300	< 0.25	0.062-0.067
MC2854, SN 418					
1	524	2000	> 2000	< 0.25	
2	599-617	2000	> 2000	< 0.25	
3	619-705	500	> 500	< 0.25	
4	802-810	500	> 500	< 0.25	
1	802	1000	> 1000	< 0.25	

*Detents functioned normally

TABLE A-6

Pilot Production Lot 1*

No. of Circuits Tested	Test Temperature Range (°F)	Maximum Voltage Applied	Input Breakdown Voltage	Voltage Across Load	Crowbar Circuit Resistance (Ω)
MC3160, SN 1029					
8	RT	2500	> 2500	< 0.25	0.053
2	200-251	2500	> 2500	< 0.25	0.053
1	500-556	2500	2500	< 0.25	0.053
1	575-588	2000	> 2000	< 0.25	0.053
1	613-673	2000	2000	< 0.25	0.053
1	694-729	500	> 500	< 0.25	0.078
2	804-880	500	> 500	< 0.25	0.078
5	1000-1054	500	500	< 0.25	0.078
8	1100-1120	200-500	200-500	< 0.25	0.078-0.103

*Detent functioned normally

P. High-Acceleration Mechanical Shock

The following hi-g shock tests were performed on units in the reset condition. All NO electrical circuits were monitored for momentary contact closures. The resistance of the crowbar circuit was determined after each shock application. Some functional tests were run after each shock. Also included are tests on MC2854 units.

P-1. In-House Fabrication

The unit was subjected to six shock pulses (one in each direction of each major axis). Each shock pulse approximated a haversine wave having a faired amplitude of 10,000 g and a duration of 0.5 ms. There were no closures of any NO electrical circuit. The crowbar circuit resistance

ranged from 0.049 to 0.057 Ω throughout the shock tests. The unit functioned successfully on Curve A following each shock application.

Two MC2854 in-house fabrication units were subjected to the shock pulses described in the following paragraphs.

One unit was subjected to a shock pulse of 12,000 g with a 0.5-ms duration applied longitudinally in the actuate direction. The other unit was subjected to one shock pulse of 12,000 g with a 0.5-ms duration applied along a transverse axis. Both units met all functional requirements after the shock test. Postmortem analysis showed the barrel of the ceramic contact insulator had cracked on the orifice end.

One MC2854 in-house fabrication unit was subjected to a series of five shock pulses (three applied longitudinally in the actuate direction and two along the transverse axes) ranging from 2050 to 12,000 g. There was no safety failures (i.e., closure of any NO electrical circuits). The unit was functional up to the final 10,000-g shock in the actuate direction. Postmortem analysis revealed a failure of the supporting flange of the tungsten alloy sleeve which resulted in considerable damage to the inertial piston and rendered the unit nonfunctional. This problem was resolved by changing the sleeve material to 15-5 stainless steel. There were no safety failures and all tests were satisfactory.

P-2 Development Phase 3B

The unit was subjected to six shock pulses (one in each direction of each major axis). Each shock pulse approximated a haversine wave having faired amplitudes from 8000 to 11,600 g and durations from 0.45 to 0.50 ms. There were no closures of any NO electrical circuits. The crowbar circuit resistance ranged from 0.051 to 0.058 Ω throughout the shock tests. The unit was functional following each shock application. The 11,600-g shock was applied in the +X direction of the X axis (i.e., the actuate direction).

One MC2854 development phase 2A unit was subjected to two shock pulses along the longitudinal axis in the actuate direction. The first shock had an amplitude of 10,800 g, 0.9 ms; the second shock had an amplitude of 22,000 g, 0.7 ms.

One MC2854 development phase 2B unit was subjected to one shock pulse applied along a transverse axis and one shock pulse applied along the longitudinal axis in the actuate direction. Each shock pulse had an amplitude of 10,900 g with durations of 0.56 ms.

Two MC2854 development phase 2C units were subjected to one shock pulse applied along a transverse axis and one shock pulse applied longitudinally in the actuate direction. Each shock pulse had an amplitude of 5000 g with a duration of 1 ms.

There were no safety failures. All tests were satisfactory. The MC3160 and the four MC2854s were furnctional after the shock applications.

P-3. Development Phase 4B

The unit was subjected to six shock pulses applied in each direction along each major axis. Each shock pulse approximated a haversine wave having a faired amplitude ranging from 10,000 to 11,600 g and durations of 0.40 ms. There were no safety failures. The crowbar resistance ranged from 0.040 to 0.046 Ω throughout the test. The unit was functional following each shock application.

P-4. Pilot Production

Two MC3160 pilot lot 1 units (1001 and 1010) were subjected to three shock pulses (two along a transverse axis and one along the longitudinal axis in the actuate direction). Each shock pulse had an amplitude of 10,000 g and a duration of 0.5 ms. Both units were functional afterward and there were no closures of any NO electrical circuits. Prior to the shock pulse tests, crowbar circuit resistance was 0.063 and 0.042 Ω ; following the tests, resistance was 0.055 and 0.045 Ω , respectively.

Two MC2854 pilot lot 1 units were subjected to three shock pulses (two along a transverse axis and one along the longitudinal axis in the actuate direction). Each shock pulse had an amplitude of 10,000 g and a duration of 0.5 ms. Both units were functional afterward and there were no closures of any NO circuits.

Two MC2854 production lot 3 units, S/N 1101 and 1103, were subjected to three 10,000-g shock pulses each with a duration of 0.5 ms. One shock pulse was applied in each of the +X, +Y, and +Z directions of the three major test axes. Both units were functional afterward and there were no closures of any NO circuits.

Q. High Voltage Test (Room Temperature)

In this test, high voltage is applied between an input terminal and the component case with the unit in the reset condition. The test circuit used for these checks is that used during simulated fire tests (paragraph O). Voltage across the 12-MΩ load as a result of leakage current through the component is monitored during each voltage application. The acceptance requirement is 2500 Vdc without breakdown and with no more than 40 V appearing across the 12-MΩ load.

Starting with supplier development phase 4B, the high-voltage test is part of the 100% acceptance tests.

Q-1. In-House Fabrication and Supplier-Built Development Units

Twenty-one actuate and reset headers (MC3160 and MC2854 use the same header) were tested for high-voltage standoff capability. These evaluations consisted of 230 separate terminal-to-case tests. The $\bar{X}$ of the tests was 3817 Vdc to breakdown. Range for all breakdowns was from 2835 to 4300 Vdc.

Four headers (two reset and two actuate) were cleaned and vacuum baked. The ceramic insulators were installed with Room Temperature

Vulcanizing Rubber (RTV) and each header was mounted in a test fixture so the component side was immersed in metering fluid. Each circuit withstood 10,000 Vdc to case without breakdown.

Eight MC2854 development phase 2C units were tested and demonstrated a standoff capability of 3500 Vdc without breakdown (each of the 10 NO circuits were tested individually). Less than 1 V was measured across the 12-MΩ load. Fourteen units were tested by connecting all NO input circuits together and connecting a 12-MΩ resistor to all output terminals connected to each other. Results were:

One unit withheld 2500 Vdc without breakdown

One unit withheld 3200 Vdc without breakdown

Three units withheld 3500 Vdc without breakdown

Nine units withheld 3600 Vdc without breakdown

In every case, less than 1 V was measured across the 12-MΩ load.

Sixteen MC2854 development phase 3A units were tested by applying 2500 Vdc between all NO circuits connected in parallel and the component case and connecting a 12-MΩ load between all output terminals and the component case. There were no breakdowns and less than 1 V was measured across the 12-MΩ load.

Sixteen MC2854 development phase 3A units were tested by applying 2800 Vdc between each of the NO circuits and the component case and connecting a 12-MΩ resistor between each respective output terminal and the component case. There were no breakdowns and less than 1 V was measured across the 12-MΩ load.

R. High-g Mechanical Shock Without Metering Fluid

At Room Temperature

Mechanical shock tests were conducted on units from which the metering fluid had been removed. The shock pulses were applied in the

actuate direction. Applicable tests performed on MC2854 components are included.

Test Description

One MC3160 pilot production unit (S/N 1001), three MC2854 units (S/N 1026) from pilot lot 2, and two units (S/N 1209 and 1240) from production lot 4 were subjected to the following shock pulses along the longitudinal axis in the actuate direction.

- Unit 1001 -- The shock pulse was 10,114 g with a duration of 0.5 ms. A momentary closure of NO electrical circuit 10-10 was detected. Following the test, NO circuit 10-10 could be closed by the application of a steady-state acceleration of 100 g. No other NO circuits could be closed. Postshock crowbar circuit resistance was 0.057 Ω .

- Unit 1026 -- The shock pulse was 9025 g with a duration of 0.48 ms. A momentary closure of NO circuit 10-10 was detected. Following the test, NO circuit 10-10 could be closed by the application of a steady-state acceleration of 300 g. No other NO circuits could be closed.

- Unit 1209 -- The shock pulse was 8000 g with a duration of 0.5 ms. No closure of any NO circuit was detected.

- Unit 1240 -- The shock pulse was 9200 g with a duration of 0.5 ms. No closure of any NO circuit was detected.

At High Temperature

Mechanical shock tests were conducted at the temperatures listed below on units from which the metering fluid had been removed. The shock pulses were applied in the actuate direction. Applicable tests performed on MC2854 components are included.

Test Description

One MC3160 unit (S/N 303) from supplier-built development phase 3B and two MC2854 units (S/N 1101 and 1103 from production lot 3) were stabilized at temperatures from 600° to 670°F. While the units were at these temperatures, they were subjected to the following mechanical shocks.

- Unit 303 at 600°F -- The shock was 5100 g with a duration of 1.0 ms. There was no closure of any NO circuit. Preshock crowbar resistance was 0.044 Ω. Postshock crowbar resistance was 0.047 Ω.

- Unit 1101 at 655°F -- The shock was 5000 g with a duration of 1.0 ms. There was no closure of any NO circuit.

- Unit 1103 at 670°F -- The shock was 5200 g with a duration of 1.0 ms. There was no closure of any NO circuit.

S. Crush

The units were mounted between parallel plates and subjected to crush forces applied along the longitudinal and transverse axes. The crush force was increased until an electrical short to the component case or closure of a NO electrical circuit was detected.

S-1. MC2854 Supplier Development Phase 2C

One unit (S/N 226) was subjected to a longitudinal crush force. A force of 40,000 lb was required to close NO circuit 10-10.

One unit (S/N 245) was subjected to a transverse crush force. An electrical short to the component case on the electrical input end of the component was detected at a force of 87,000 lb.

S-2. Pilot Production

One MC3160 unit (S/N 1010) was subjected to a transverse crush force. At a force of 52,770 lb, an electrical short to the component case on the MC3160 electrical output end was detected.

One MC2854 unit from production lot 3 (S/N 1103) was subjected to a longitudinal crush force. NO circuit 10-10 closed at a force of 27,500 lb.

NOTE

> In response to a request from the W76/Mk 4 Systems Development organization shortly after the completion of supplier development phase 2C, we removed material from the component cylinder (MC3160 uses the same cylinder) to reduce component weight. The material removal has resulted in a slightly reduced crush capability as noted in the above tests.

T. Detent Function Tests

Several detent test modules are put together and tested each time a new lot of accumulator bellows detent assemblies are filled with the temperature sensitive eutectic alloy as specified in Note 5 of Dwg 303778

of the MC3160 and MC2854. These test modules are subjected to a No-Go (eutectic alloy must not melt) test in a stabilized fluid (cooking oil) at 235±1°F for 135±15 s. One side of the test module is pneumatically pressurized at 9±1 psig. Following the No-Go test, the modules (still pressurized at 9±1 psig) are subjected to a Must-Go (eutectic must melt) test in a stabilized fluid (also cooking oil) at 257±1°F. Each detent must operate within 120 s. The specification requirement for the eutectic alloy used in both the MC2854 and MC3160 (Cerroseal Alloy 35) provides a melt range of 240° to 260°F. To date, some 80 test modules have been submitted to the above No-Go and All-Go tests without failure. The detent assemblies in each of the nine fire test units functioned satisfactorily.

U. Miscellaneous

As a matter of interest, the following MC2912 tests using two in-house fabricated MC2854 units are included. Also included are the results of the first five systems flight tests completed as of this writing.

W76 AF&F Tests

Sequence No. 1

- Test 1 -- The MC2854 unit (S/N 005) was exposed to a complex-wave vibration with a power spectral density of 0.2 g^2/Hz over the frequency range of 80 to 2000 Hz. Vibration was applied for 5 min along each major component test axis (total 15 min vibration).

- Test 2 -- The unit was subjected to two 400-g, 1-ms shock pulses applied along each of the major component test axis (total 12 shocks).

- Test 3 -- The unit was exposed to a complex-wave vibration with a power spectral density of 0.05 g^2/Hz from 80 to 2000 Hz. Vibration was applied for 15 s along each of the three major component test axis (total 45 s vibration).

- Test 4 -- The component was actuated by subjecting it to a 12-g launch profile.

- Test 5 -- The latch mechanism was tested by subjecting the unit to an 80-g reverse acceleration.

Sequence 2

- Test 1 -- The unit (S/N 005) was subjected to 56 thermal cycles from 140° to -20°F.

- Test 2 -- The unit was exposed to a complex-wave vibration with a power spectral density of 0.02 g^2/Hz from 80 to 2000 Hz applied for 5 min along each of the three major component test axes (total 15 min vibration).

- Test 3 -- The component was subjected to the following sinusoidal vibrations:

  7 g, from 140 to 180 Hz
  3 g, from 180 to 600 Hz
  2 g, from 600 to 100 Hz

Vibration was applied for 5 min along each major test axis (total 15 min vibration).

- Test 4 -- The component was subjected to two 100 g, 2.0 ms shocks applied in each direction along each major test axis (total 12 shocks).

- Test 5 -- The unit was subjected to a complex-wave vibration having a power spectral density of 0.05 g^2/Hz from 80 to 2000 Hz applied for 15 s along each major test axis (total 45 s vibration).

- Test 6 -- The component was actuated by subjecting it to a 12-g launch profile

- Test 7 -- The latch mechanism was tested by subjecting the unit to an 80-g reverse acceleration.

Continuity in the NC monitor circuit was lost during the first test in the second sequence. All other tests were satisfactory.

Accelerated Aging Test

MC2854 in-house fabrication unit No. 29 was subjected to the following aging tests as part of MC2912 test 47A:

- Test 1 -- The unit was exposed to 200 thermal cycles from 140° to -65°F.

- Test 2 -- The unit was exposed to 13 months of storage at 170°F.

All tests on the AF&F assembly involving the MC2854 were satisfactory. After removal from the AF&F assembly, the unit met all of the 100% acceptance requirements.

Systems Flight Tests

To date, one MC2854 (phase 2B unit No., 235), and four MC3160s (phase 3B unit No. 401, phase 4B units No. 401, 411, and 419) have been flown on W78 flight tests. All environmental sensing devices (ESDs) functioned satisfactorily.

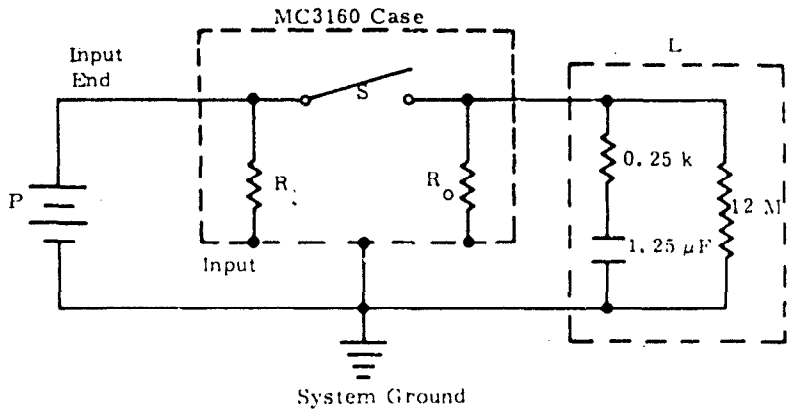

S = any one of the eight NO electrical circuits.

R_i = the electrical resistance between any input terminal and the component case (across the glass-to-metal seal)

R_o = the electrical resistance between any output terminal and the component case (across the glass-to-metal seal)

P = variable dc power source

L = the system use load (MC3028)

MC3160 case = the metal housing of the component, which is common with the system ground. Included are simulated fire tests on MC2854 models where appropriate. The electrical input of the MC3160 is the electrical output of the MC2854.

Figure A-1. High-Temperature Electrical Insolation Test Circuit

APPENDIX B

MC2854/MC3160 Orientation Effect Studies

The component test orientations used in the ensuing discussions are depicted in Figure B-1. These positions were arbitrarily identified with respect to the location of the accumulator bellows tower as 90°, 180°, 270°, and 0°.

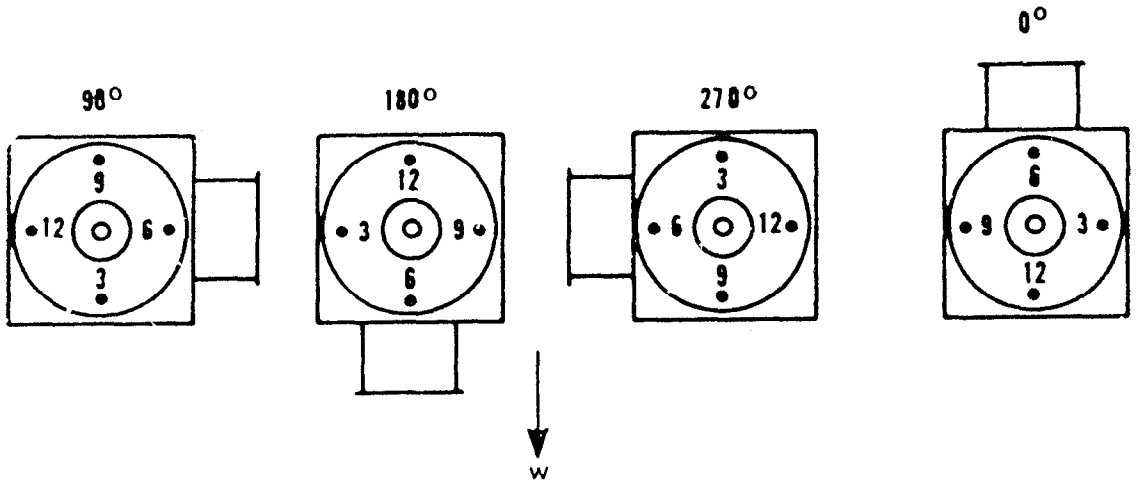

W = 1-g gravitational force on piston

Figure B-1. Component Orientations

During testing of MC2854 development group 3A units, we observed that a variation in operate characteristics occurred when components were tested on the centrifuge in different orientation positions. Through tests and analyses, we determined that this "orientation effect" was due to an internal "built-in" side load between the piston and cylinder. This internal side load combines with the 1-g gravitational side load so the resultant side load between piston and cylinder varies with component orientation. This internal side load results from an unbalanced force transmitted through the decoupling mechanism which pushes the piston against the cylinder. We also determined that the magnitude and direction of the internal side load was influenced primarily by an off-center force (eccentric load) of the compression spring. In a particular unit, the

magnitude and pattern of the "orientation effect" could be varied by rotating the termination of the end coil of the spring to different positions. The orientation effect was greatest when the spring was positioned so that the internal side load was directed toward the tower through pin 6, and when the spring was rotated 180° so that the side load acted in a direction away from the tower through pin 12. The effect was smallest when the spring was rotated 90° from these positions so that the side load was directed toward pin 3 or pin 9. This phenomenon existed in tests of various components and spring combinations, and mathematical model analyses showed reasonably good correlation with test data.

Figure B-2 is an example of orientation patterns of the applied acceleration level required to open the monitor circuit for various spring locations on an MC2854 for one combination of spring force, internal friction, and eccentric loading. The coefficient of friction, μ, between piston and cylinder was assumed to be 0.2 in all component orientations. In plot 1, the spring is in such a position so that the side load is toward the tower (pin 6); in plot 2, the spring is rotated 180° so that the side load acts away from the tower toward pin 12; in plot 4, the spring is rotated 90° from the plot 1 position so that the side load acts toward pin 3; in plots 3 and 5, the spring is located 15° on either side of the location in plot 4. Also depicted are the orientation patterns for plots 3, 4, and 5 with 0 g and a 0.3-g externally applied side load (rather than the 1-g side load).

To control the magnitude and direction of the internal side load, controls on the spring-end coil configuration and assembly location were incorporated starting with MC2854 pilot lot 1. The location of the spring kept the direction of the internal side load near the direction shown in plots 3, 4, or 5 in Figure A-2. Analyses of test data from MC2854 pilot lot 1, pilot lot 2, and lot 3 units, and from MC3160 pilot lot 1 units indicate that the objectives were achieved, both as to magnitude and direction of the internal side loads. In real life, μ is not constant between units, nor in various component orientations for a particular unit. The analyses of test data from the above units indicate that

variations in μ contributed substantially to the noted orientation effect and that the larger variabilities were due to variations in μ rather than variations in internal side load. Tests and analyses assessed the orientation effect on the performance characteristics of the MC2854 and MC3160. A summary of this evaluation follows.

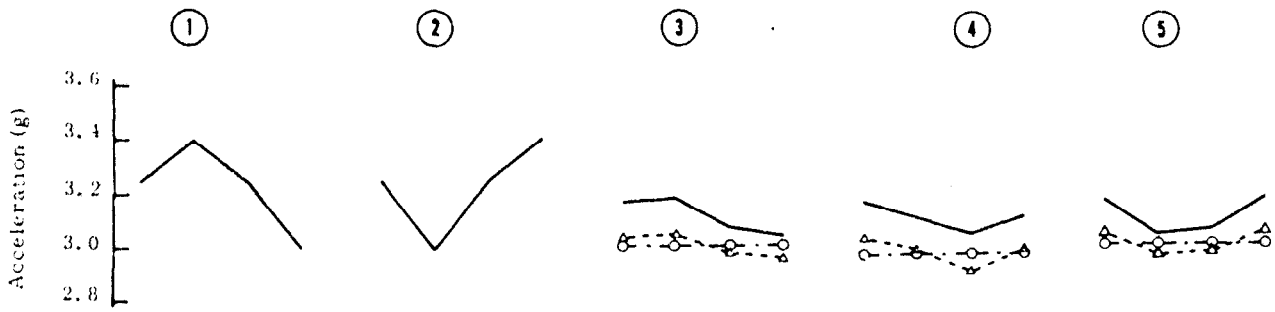

NOTES:

1. For each of the above patterns, component orientation positions are 90°, 180°, 270°, and 0°, respectively.
2. The patterns are obtained as follows:

   a. Solid lines (———) are obtained with a 1-g gravitational external side load.

   b. Broken lines (o —·— o) are obtained with a 0-g external side load.

   c. Dotted lines (Δ- - -Δ) are obtained with a 0.3-g external side load.
3. For each pattern, the direction of the off-center spring force and the direction of the internal side load (piston to cylinder) are:

   (1) In the direction of the tower toward terminal 6.
   (2) Away from the tower toward terminal 12.
   (3) 15° counterclockwise from terminal 3.
   (4) Perpendicular to the tower toward terminal 3.
   (5) 15° clockwise from terminal 3.

Figure B-2. MC2854/MC3160 Typical Orientation Patterns at Opening of Monitor Circuit

1. 3 g No-Go -- In both components, the spring force assures meeting this requirement independently of the orientation effect. The minimum specified spring force requires about 3.14-g and about 3.46-g to actuate the MC2854 and MC3160, respectively, for nominal component dimensions without considering any frictional forces. In addition, in-process Instron tests are conducted on each unit with the unit in the vertical position (i.e., no external side load applied). The minimum allowed force to actuate the unit is equivalent to 3.3 and 3.4 g for the MC2854 and MC3160, respectively. Since the spring specification and Instron force limits ensure the 3-g No-Go capability, the primary utility of centrifuge acceptance tests is to collect data and to ensure that a gross change (like a broken spring) has not occurred. PAG and constant acceleration tests are performed on the centrifuge with the component in the 180° and 0° orientations during in-process tests and in the 90° position in 100% acceptance tests.

2. Minimum g-s -- Since the net driving force at the acceleration level where the minimum g-s product occurs is relatively large compared with the variation in side load frictional force, the orientation effect should not be significant. Analyses of data from Curve B (10 g) tests conducted on units in various orientations indicate that there is not a meaningful statistical difference in the operate times of a population of units tested in different orientations. Curve B (10 g) tests are conducted on each unit in the 180° and 0° orientations during in-process Instron tests, and in the 90° position during 100% acceptance tests. Acceptance limits are conservatively set to allow for any expected change in the fast direction.

3. Operate on Flight Profiles -- Curve A tests are used during production acceptance to control the operate characteristic on the flight profiles. Curve A for the MC2854 simulates the minimum second-stage profile for its application; and for the MC3160, Curve A simulates the minimum third-stage profile for its application. Since the net driving force for the MC2854 is not large, significant increases (from large internal side load or large micron) in side load friction will result in

relatively long operate times, especially during centrifuge tests with 1-g gravitational side load. The effect is somewhat less for the MC3160 because more net driving force is available in its application. The primary motivation for controlling the orientation effect was to decrease variability and increase the margin of operate times on these test curves. Analyses of test data indicate that these goals were achieved and that ample operate margin exists for normal units.

Since in actual flight the sustained, externally applied side load on these minimum profiles is substantially less than the 1 g existing on the centrifuge test, the expected orientation effect in the use environment should be substantially less than that obtained in production acceptance tests. Tests conducted on these curves for their respective simulated flight conditions indicate a significant reduction in orientation effect for the MC2854 and essentially no orientation effect for the MC3160. The test results also indicate that data obtained from acceptance tests with a 1-g side load are pessimistic and conservative in that the slower units in the population in general have relatively large μ's. The reduction in external applied side load has the largest absolute effect when μ is relatively large.

Curve A tests with proper acceptance limits are conducted on each unit in 180° and 0° orientations during in-process tests, and in the 90° position during 100% tests. Analyses of test data indicate that units accepted to these requirements will operate in their respective applications with ample margin.

DISTRIBUTION:

1210 A. J. Clark, Jr
1222 G. T. Merren
1230 W. L. Stevens
1410 W. C. Kraft
1420 R. H. Schultz
2320 K. L. Gillespie
2324 L. W. Hake (2)
3151 C. J. Mora
4330 E. E. Ives
4338 W. D. Ulrich (4)
4360 J. A. Hood
6011 G. C. Newlin (3)
8110 J. F. Barham, Jr.
8266 E. A. Aas
8322 F. J. Murar
3141 T. L. Werner (5)
3151 W. L. Garner (3)
For DOE/TIC (Patent Caution)